aprilia

RSV mille TUONO USA - RSV mille R TUONO USA

use+maintenancebook

aprilia part# 8104702

Downloaded from www.Manualslib.com manuals search engine

© 2003 **aprilia s.p.a.** - Noale (VE)

First edition: april 2003

Reprint:

Produced and printed by:
DECA s.r.l.
Via Risorgimento, 23/1 - Lugo (RA) - Italia
Tel. +39 - 0545 35235
Fax +39 - 0545 32844
E-mail: deca@decaweb.it
www.decaweb.it

On behalf of:
aprilia s.p.a.
via G. Galilei, 1 - 30033 Noale (VE) - Italy
Tel. +39 - 041 58 29 111
Fax +39 - 041 44 10 54
www.aprilia.com

FOREWORD

NOTE This manual is an important and integral part of your vehicle. Keep it with your vehicle at all times, even if your vehicle is resold.

aprilia has prepared this manual to supply you, the user, with correct and current information. However, since **aprilia** constantly improves the design of its vehicles, there may be slight discrepancies between your vehicle and the material given in this manual. If you have any questions about your vehicle, contact your local **aprilia** Dealer, as he will have the very latest technical information available from the factory.

For tests and repairs not expressly described in this manual, to purchase **aprilia** genuine spare parts, accessories, and other products, and for help with specific problems, please contact your official Dealer **aprilia** or service center. These professionals will be able to promptly and accurately help.

Thank you for choosing **aprilia**. Have a great ride!

This manual is copyright in all countries; partial or complete reproduction of any part by any means in print or electronic is strictly prohibited.

INTRODUCTION

This manual is divided into sections, chapters and paragraphs, by subject. The procedures described are laid out in single operation, and each operation is indicated by a ◆.

The numbered parts shown in the figures are identified in the text with the number in parentheses or with the symbol representing them.

Example (the following text is generic and does not refer to this specific vehicle):

section → **MAIN INDEPENDENT CONTROLS**

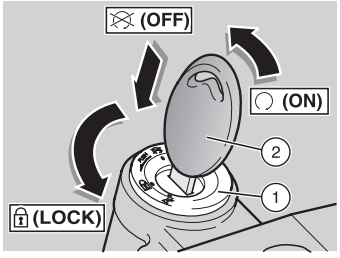

chapter → **STEERING LOCK**

safety warning → **⚠ WARNING**
Never attempt to place the ignition switch in the locked "H" (LOCK) position while the vehicle is moving.

paragraph → **OPERATION**
To lock the steering:

operation → Turn the handlebar completely to the left or to the right.

position (2) → Turn the key (2) to position "+".

symbol "H" → Press the key and turn it to position "H". Remove the key.

Downloaded from www.Manualslib.com manuals search engine

SAFETY WARNINGS

The following precautionary warnings are used throughout this manual in order to convey the following messages:

⚠ Safety Warning: When you see this symbol on the vehicle or in the manual, pay particular attention to the potential risk of personal injury or death. Non-compliance with the instructions given in the warning messages preceded by this symbol may result in serious risk for your and other people's safety and for the vehicle.

⚠ WARNING

Indicates a potential hazard which may result in serious injury or even death.

⚠ CAUTION

Indicates a potential hazard which may result in personal injury or damage to the vehicle or other property.

NOTE The word "NOTE" in this manual precedes important information or instructions.

GENERAL SAFETY RULES

CARBON MONOXIDE

If it is necessary to run the engine in order to carry out maintenance operation, make sure that the area in which you are operating is properly ventilated. Never run the engine in enclosed spaces.
If it is necessary to work indoors, use an exhaust evacuation system.

⚠ WARNING

The exhaust fumes contain carbon monoxide, a poisonous gas that can cause loss of consciousness and even death.

⚠ WARNING

Carbon monoxide is both colorless and odorless, and cannot be detected by smell, vision, or any other sense. Avoid breathing exhaust fumes under any circumstances.

GASOLINE

Keep gasoline away from children. Gasoline is also poisonous. Never attempt to siphon gasoline using your mouth. Never allow gasoline to contact your skin. If you should accidentally spill gasoline on yourself, change your clothes immediately and wash the area upon which the gasoline was splashed thoroughly with hot water and soap. Should you accidentally swallow gasoline, do not induce vomiting. Drink large quantities of clear water or milk and immediately seek professional medical assistance. Should you accidentally get gasoline into your eyes, flush with large quantities of cool, clear water and immediately seek professional medical assistance.

⚠ WARNING

Gasoline is extremely flammable and becomes explosive under certain conditions.

KEEP GASOLINE AWAY FROM CHILDREN.

HOT COMPONENTS

⚠ WARNING

The engine and all parts of the exhaust system, as well as the braking system, become very hot and remain hot for some time after the vehicle and the engine are stopped. Before handling any component of your vehicle after riding, ensure that it has cooled sufficiently to be safe to handle.

USED ENGINE OIL

⚠ WARNING

Use latex gloves for the maintenance operations that require contact with used oil. Used engine oil may cause skin cancer if repeatedly left in contact with the skin for prolonged periods. Although this is unlikely unless you handle used oil on a daily basis, it is advisable to thoroughly wash your hands with soap and water after handling used oil.

KEEP OIL AWAY FROM CHILDREN.

Downloaded from www.Manualslib.com manuals search engine

BRAKE FLUID

⚠ CAUTION

Brake fluid is extremely poisonous. Do not ever allow brake fluid to be ingested or swallowed. Should brake fluid accidentally be swallowed, drink large quantities of milk or clear water and immediately seek professional medical assistance. Brake fluid is highly destructive of skin and eye tissue. Should you accidentally spill clutch fluid on yourself, remove the contaminated clothing, wash your body with soap and warm water immediately and seek professional medical assistance with no delay. . Should you accidentally splash brake fluid into your eyes, flush with a large quantity of cool, clear water and immediately seek professional medical assistance.

KEEP BRAKE FLUID AWAY FROM CHILDREN.

CLUTCH FLUID

⚠ CAUTION

Clutch fluid is extremely poisonous. Do not ever allow clutch fluid to be ingested or swallowed. Should clutch fluid accidentally be swallowed, drink large quantities of milk or clear water and immediately seek professional medical assistance. clutch fluid is highly destructive of skin and eye tissue. Should you accidentally spill clutch fluid on yourself, remove the contaminated clothing, wash your body with soap and warm water immediately and immediately seek professional medical assistance. Should you accidentally splash clutch fluid into your eyes, flush with a large quantity of cool, clear water and immediately seek professional medical assistance.

KEEP CLUTCH FLUID AWAY FROM CHILDREN.

COOLANT

In certain conditions, the ethylene glycol contained in the engine coolant is flammable: its flame is invisible, but you can be burned anyway.

⚠ WARNING

Avoid spilling the engine coolant on the exhaust system or on the engine components. They may be hot enough to cause the coolant to ignite and burn without a visible flame.
The coolant (ethylene glycol) can cause skin irritation and is poisonous if swallowed.
Coolant and coolant/water mixtures are sweet to the taste and brightly colored, therefore are highly attractive to pets and children. Take extra precautions to keep new and used coolant out of reach of children and animals.

KEEP COOLANT AWAY FROM CHILDREN.

Risk of burns.
Do not remove the radiator cap when the engine is hot. Wait until the engine has completely cooled down. The coolant is under pressure and may splash out and cause burns.

BATTERY HYDROGEN GAS AND ELECTROLYTE

⚠ WARNING

The battery gives off noxious and explosive gases; keep cigarettes, flames and sparks away from the battery. Provide adequate ventilation when operating or recharging the battery.

During recharging and use, make sure that the room is properly ventilated and avoid inhaling the gases released during the recharging.

The battery contains sulphuric acid (electrolyte). Contact with the skin or eyes may cause serious burns. Always wear protective clothing, rubber gloves, and tight fitting goggles or a face shield when working around the battery, especially when filling the battery with either water or electrolyte.

In case of contact with the skin, flush immediately with plenty of water. In case of contact with the eyes, flush with plenty of water for at least 15 minutes. Immediately consult a health professional.

The electrolyte is poisonous.
If the electrolyte is accidentally swallowed, drink large quantities of water or milk and then milk of magnesia or vegetable oil. Immediately consult a health professional.

KEEP BATTERIES AND ELECTROLYTE AWAY FROM CHILDREN.

Downloaded from www.Manualslib.com manuals search engine

WARNINGS - PRECAUTIONS - GENERAL ADVICE

Before starting the engine, carefully read this manual and in particular the chapters "WARNINGS - PRECAUTIONS - GENERAL ADVICE" and "SAFE DRIVE" see p. 17.

Your safety and that of those around you depends not only on your skill as a rider, but also your knowledge about your vehicle and about riding safely. Therefore it is essential that you not operate your vehicle on public streets or highways until you have received instructions from a qualified safety organization such as the Motorcycle Safety Foundation, and are properly trained and licensed.

REPORTING OF DEFECTS THAT AFFECT SAFETY

If you believe that your vehicle has a defect which could cause a crash or could cause injury or death, you should immediately inform the **National Highway Traffic Safety Administration** (NHTSA) in addition to notifying **aprilia**. If NHTSA receives similar complaints, it may open an investigation, and if it finds that a safety defect exists in a group of vehicles, it may order a recall and remedy campaign. However, NHTSA cannot become involved in individual problems between you, your dealer, or **aprilia**. To contact NHTSA, you may either call the **Auto Safety Hotline** toll free at 1-800-424-9393 (or 366-0123 in the Washington, D.C. area) or write to: NHTSA, U.S. Department of Transportation, Washington, D.C. 20590.

You can also obtain other information about motor vehicle safety from the Hotline.

ROAD REGULATIONS AND USE OF THE VEHICLE

Rules of the road vary from country to country. It is essential that you understand in advance the rules of the road of the country in which your vehicle will be used.

⚠ WARNING

This vehicle has been designed and produced for use only on paved roads. It is not designed to be used on even smooth graded dirt roads, or trails. It is not designed for off road competition, or for cross country riding. Do not use this vehicle on rough or unimproved surfaces, or in other off road areas. Failure to heed this warning could lead to an upset with subsequent injury and even death.

NOISE EMISSION WARRANTY

aprilia s.p.a. warrants that this exhaust system, at the time of sale, meets all applicable U.S. **EPA** Federal noise standards. This warranty extends to the first person who buys this exhaust system for purposes other than resale, and to all subsequent buyers.

Warranty claims should be directed to:

aprilia USA Inc.

109 Smoke Hill, Lane Suite 90
Woodstock, GA 30188
USA
Tel 770 592 2261
Fax 770 592 4878

INFORMATION ON THE NOISE AND EXHAUST GAS EMISSION CONTROL SYSTEM

ORIGIN OF THE EMISSIONS

The combustion process produces carbon monoxide and hydrocarbons. The control of hydrocarbons is very important, because under certain conditions they react to exposure to sunlight and produce photochemical smog.
Carbon monoxide does not react in the same way, but it is toxic and poisonous. **aprilia** utilizes "lean" carburetor settings and other systems to reduce the production of carbon monoxide and hydrocarbons.

TAMPERING WARNING

Tampering with the noise control system is prohibited. Federal law prohibits the following acts or causing thereof:

a) The removal or rendering inoperative by any person other than for purposes of maintenance, repair, or replacement, of any device or element of design incorporated into any new vehicle for the purpose of noise control prior to its sale or delivery to the ultimate purchaser or while it is in use, or
b) The use of the vehicle after such device or element of design has been removed or rendered inoperative by any person.

Downloaded from www.Manualslib.com manuals search engine

Among those acts presumed to constitute tampering are the acts listed below:

a) Removal of, or puncturing the muffler, baffles, header pipes or any other component which conducts exhaust gases.
b) Removal of or puncturing any part of the intake system.
c) Lack of proper maintenance.
d) Replacing any moving part of the vehicle, or parts of the exhaust or intake system, with parts other than those specified by the manufacturer.

⚠ CAUTION

This product should be checked for repair or replacement if the vehicle noise has increased significantly through use. Otherwise, the owner may become subject to penalties under state and local ordinances.

PROBLEMS THAT MAY AFFECT THE VEHICLE EMISSIONS

If any of the following symptoms are observed, immediately have your vehicle inspected and repaired by your **aprilia Official Dealer**.

Symptoms:

– Difficult starting or stalling after starting.
– Irregular idle.
– Misfiring or backfiring during acceleration.
– After-burning (backfiring).
– Poor engine performance, degraded handling, or poor fuel economy.

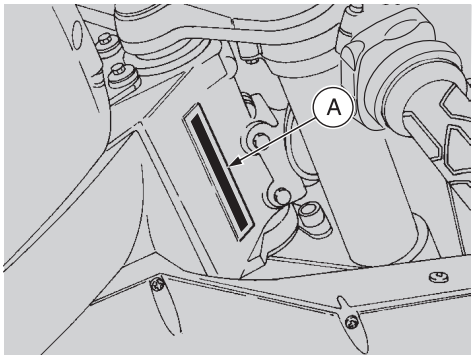

VEHICLE IDENTIFICATION NUMBER (V.I.N.) (FRAME NUMBER)

Every vehicle produced by **aprilia** receives a vehicle identification number (V.I.N.) stamped:

– on the steering head of the frame (A), as shown above;

and also:

– on the identification plate (B) which is located on the front portion near the steering head of the frame.

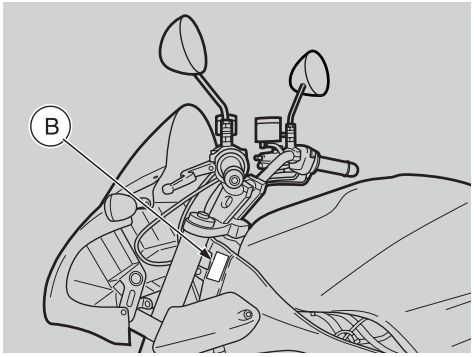

INFORMATION CONTAINED IN THE VEHICLE IDENTIFICATION NUMBER

Description of the vehicle identification number (V.I.N.), stamped on the steering head of the frame (A) and on the identification plate (B).

Downloaded from www.Manualslib.com manuals search engine

DIGIT MEANING

1) Manufacturer's identification alphanumeric code.
2) Vehicle type.
3) Model.
4) Country for which the vehicle is intended.
5) #= Check digit number.
6) Model year.
7) Assembling factory designation
   (N = NOALE-VE- ,
   S = SCORZÉ -VE- ,
   0 = NOT SPECIFIED).
8) Sequential serial number.

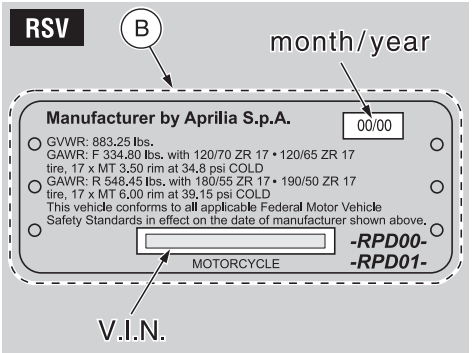

y

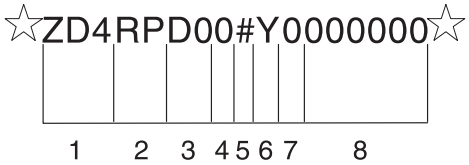

FOR STATE OF CALIFORNIA ONLY:

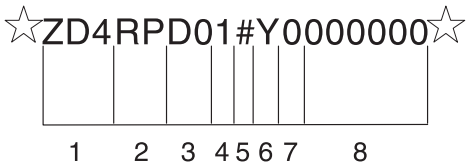

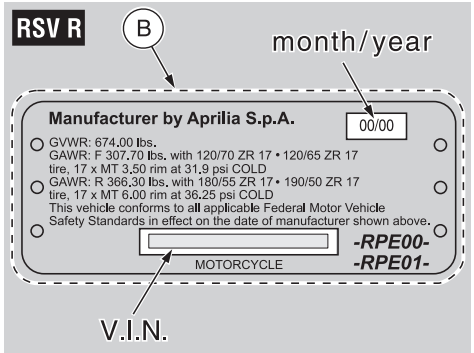

z

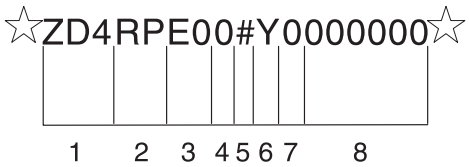

FOR STATE OF CALIFORNIA ONLY:

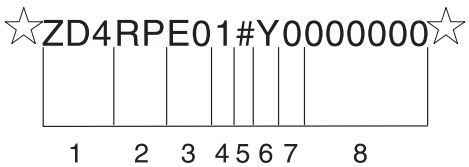

Downloaded from www.Manualslib.com manuals search engine

POSITION OF THE WARNING ADHESIVE LABELS R

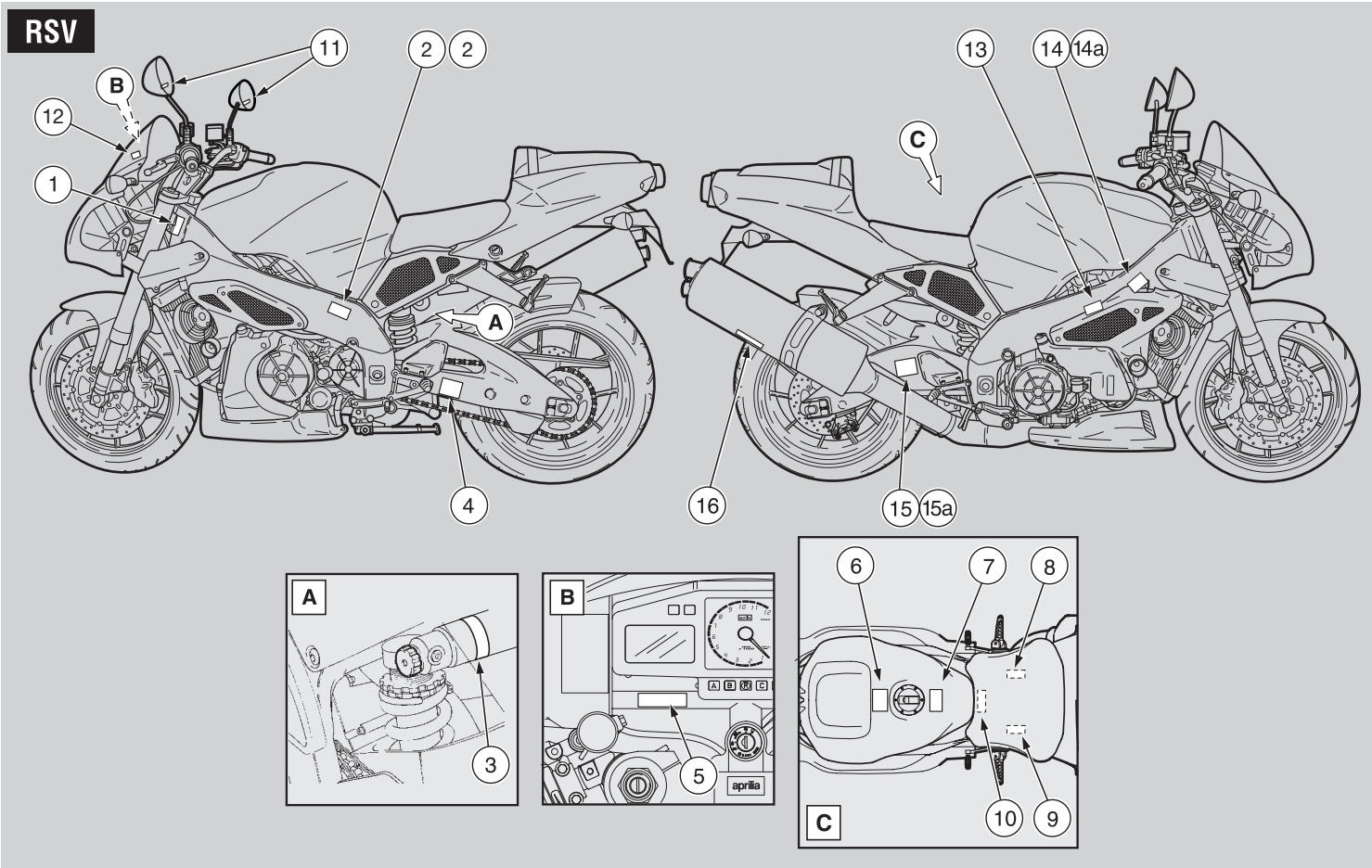

Downloaded from www.Manualslib.com manuals search engine

WARNING ADHESIVE LABELS CHART R

Ref.	Description
1	**Manufacturer by Aprilia S.p.A.** GVWR: 884 lbs. GAWR: F 335 lbs. with 120/70 ZR 17 • 120/65 ZR 17 tire, 17 x MT 3.50 rim at 34.8 psi COLD GAWR: R 549 lbs. with 180/55 ZR 17 • 190/50 ZR 17 tire, 17 x MT 6.00 rim at 39.15 psi COLD This vehicle conforms to all applicable Federal Motor Vehicle Safety Standards in effect on the date of manufacturer shown above. MOTORCYCLE *-RPU-* *-RPC-*
2	**NOT PROVIDED FOR 49 STATES.**
2a	**FOR STATE OF CALIFORNIA ONLY.** *EVAP FAMILY: 3ASPE0024MLA* *HOSE ROUTING DIAGRAM* *Aprilia S.p.A.* *-RPC-* FUEL TANK CONNECTION ON THE FRAME LOWER PLASTIC COVER ONE WAY VALVE "Y" THREE WAY CONNECTOR AIR PURGE CONTROL VALVE TO THE FUEL CONTROL VALVE AIR BOX "T" THREE WAY CONNECTOR MANIFOLD VACUUM PORT. "T" THREE WAYS CONNECTOR NARROW PASSAGE CARBON CANISTER AIR
3	⚠ *WARNING!* ● CONTAINS HIGH PRESSURE NITROGEN GAS. ● SEE WORKSHOP MANUAL FOR DISPOSAL AND ADJUSTING UNIT. ● *DO NOT OPEN. DO NOT INCINERATE.* INCINERATION, PUNCTURE OR DISASSEMBLY MAY CAUSE THIS UNIT TO EXPLODE.

Ref.	Description
4	⚠ *WARNING!* *Do not use any tire other than those recommended and approved by Aprilia. Maintain proper tire inflation. Do not use any tire with less than 1/8" (3mm) tread remaining. Do not repair any tire, nor use a repaired tire. Do not ride your motorcycle overloaded or with an unbalanced load. Failure to follow these warnings can lead to an accident and serious injuries or death. Always ensure that the chain is correctly adjusted. See owner's manual.* *-RPU-* *-RPC-* aprilia CHAIN TENSION WITH NO LOAD 25 mm Tires pressure bar - (psi) Front tire / Rear tire 2.2 (31.9) / 2.5 (36.25) 2.4 (34.8) / 2.7 (39.15) 2.4 (34.8) / 2.7 (39.15) Tires size Front tire: Pirelli - Metzeler / Dunlop 120/70 ZR 17" 120/65 ZR 17" Rear tire: Pirelli - Metzeler / Dunlop 180/55 ZR 17" 190/50 ZR 17"
5	⚠ *WARNING!* DO NOT ALLOW KEY CHAIN AND ANY OTHER ITEM TO FALL BETWEEN THE STEERING HEAD AND THE BODY OF MOTORCYCLE. THIS CAN CAUSE LOSS OF CONTROL.
6	⚠ *WARNING!* • *Wear a helmet, eye protection, and bright protective clothing.* • *Don' t ride after consuming alcohol or other drugs.* • *Slow down on slippery surface, unfamiliar terrain or when visibility is reduced.* • *Read owner's manual carefully* • *Failure to follow these warnings can lead to an accident and serious injuries or death.* • *USE UNLEADED FUEL MINIMUM OCTANE RATING (R + M) / 2 METHOD 90.* • *See owner's manual for the correct running in and maintenance of the vehicle.*
7	⚠ *WARNING!* *Never install accessories or replacement parts not approved by Aprilia as original equipment. This can degrade the handling and safety of your motorcycle, and can cause an upset with subsequent accident and serious injury or even death. The stability and safety of any motorcycle is adversely affected by the addition of any load carrying accessory. See owner's manual.*

to be continued

Downloaded from www.Manualslib.com manuals search engine

Ref.	Description
8	aprilia BATTERY SERVICE WARNING! + − MAX min Maintain electrolyte level between the two level marks. Use only distilled water. Always keep the battery charged. **Never disconnect the battery or regulator with the engine running. This will destroy the entire electrical system.**
9	aprilia SPARE PARTS IDENTIFICATION YEAR: Y 1 2 3 4 I.M.: A B C D E I UK A P SF B D F E GR NL CH DK J SGP SLO IL ROK MAL RCH HR AUS USA BR RSA NZ CDN
10	WARNING! *Contain sulfuric acid which can cause severe injuries. Avoid contact with skin, eyes or clothing. Antidote: EXTERNAL - Flush with water. INTERNAL - Drink large quantities of water or milk. Follow with milk of magnesia, beaten egg or veg. oil. Call physician immediately. Eyes: Flush with water for 15 minutes and get prompt medical attention.* *KEEP OUT OF REACH OF CHILDREN.* *Batteries produce explosive gases. Keep sparks, flames, cigarettes away. Charge only in well-ventilated space. Always wear protective goggles when working around batteries. Always connect the battery vent tube. Failure to heed this warning will cause corrosion of the electrical system.*
11	OBJECTS IN MIRROR ARE CLOSER THAN THEY APPEAR.

Ref.	Description
12	WARNING! • *Keep windshield clean at all times.* • *Clean only with a soft cloth and warm water with a mild detergent.* • *Replace windshield if becomes scratched or discoloured so as to interfere with view.* • *Do not allow any alcaline or strong acid cleaner, gasoline, brake fluid or any other solvent to contact the windshield.* • *When replacing windshield, use only Aprilia original replacement windshield.*
13	WARNING! *DO NOT REMOVE THE CAP UNTIL THE ENGINE IS ENTIRELY COOL. COOLANT IS HOT AND UNDER PRESSURE. FAILURE TO OBSERVE THIS WARNING MAY LEAD TO SERIOUS BURNS. USE ONLY FLUID FOR SEALED CIRCUITS. USE ONLY ANTIFREEZE AND ANTICORROSIVE WITHOUT NITRATE, ENSURING PROTECTION -35°C AT LEAST.*
14	MOTORCYCLE NOISE EMISSION CONTROL INFORMATION THIS 2003 ASP42B0998 MOTORCYCLE, 8119582 MEETS EPA NOISE EMISSION REQUIREMENTS OF 80 dBA AT 5088 closing r.p.m. BY FEDERAL TEST PROCEDURE. MODIFICATIONS WHICH CAUSE THIS MOTORCYCLE TO EXCEED FEDERAL NOISE STANDARDS ARE PROHIBITED BY FEDERAL LAW. SEE OWNER'S MANUAL. RPU - RPC aprilia
14a	**FOR STATE OF CALIFORNIA ONLY.** MOTORCYCLE NOISE EMISSION CONTROL INFORMATION THIS 2003 ASP42B0998 MOTORCYCLE, 8119582 MEETS EPA NOISE EMISSION REQUIREMENTS OF 80 dBA AT 5088 closing r.p.m. BY FEDERAL TEST PROCEDURE. MODIFICATIONS WHICH CAUSE THIS MOTORCYCLE TO EXCEED FEDERAL NOISE STANDARDS ARE PROHIBITED BY FEDERAL LAW. SEE OWNER'S MANUAL. RPU - RPC aprilia

to be continued

Downloaded from www.Manualslib.com manuals search engine

Ref.	Description
15	VEHICLE EMISSION CONTROL INFORMATION -RPC- ENGINE DISPLACEMENT: 998 cc ENGINE FAMILY: 3ASPC0.99MEA THIS VEHICLE CONFORMS TO U.S. EPA REGULATIONS APPLICABLE TO 2003 MODEL YEAR NEW MOTORCYCLES. ENGINE EXHAUST CONTROL SYSTEM: N/A ENGINE TUNE UP SPECIFICATIONS IGNITION TIMING: 21.8° ± 2° AT 2800 RPM IDLE SPEED: 1250 ± 100 RPM IN NEUTRAL VALVE CLEARANCE: INLET 0.005÷0.006 inch (0.12÷0.17 mm) OUTLET 0.009÷0.011 inch (0.23÷0.28 mm) SPARK PLUG: NGK R DCPR9E FUEL: MINIMUM OCTANE RATING (M+R)/2 METHOD 90 OIL: ENGINE OIL VISCOSITY SAE 15W-50 Aprilia S.p.A. Via G.Galilei 1 30033 Noale (VE) ITALY aprilia
15a	**FOR STATE OF CALIFORNIA ONLY.** VEHICLE EMISSION CONTROL INFORMATION -RPC- ENGINE DISPLACEMENT: 998cc ENGINE FAMILY: 3 ASPC0.99MEA THIS VEHICLE CONFORMS TO U.S. EPA AND CALIFORNIA REGULATIONS APPLICABLE TO 2003 MODEL YEAR NEW MOTORCYCLES AND IS CERTIFIED TO 1.4 HC G/KM ENGINE FAMILY EXHAUST EMISSION STANDARD IN CALIFORNIA. ENGINE EXHAUST CONTROL SYSTEM: OC ENGINE TUNE UP SPECIFICATIONS IGNITION TIMING: 21.8° ± 2° AT 2800 RPM IDLE SPEED: 1250 ± 100 RPM IN NEUTRAL VALVE CLEARANCE: INLET 0.005÷0.006 inch (0.12÷0.17 mm) OUTLET 0.009÷0.011 inch (0.23÷0.28 mm) SPARK PLUG: NGK R DCPR9E FUEL: MINIMUM OCTANE RATING (M+R)/2 METHOD 90 OIL: ENGINE OIL VISCOSITY SAE 15W-50 Aprilia S.p.A. Via G.Galilei 1 30033 Noale (VE) ITALY aprilia
16	Muffler stamping.

Downloaded from www.Manualslib.com manuals search engine

POSITION OF THE WARNING ADHESIVE LABELS q

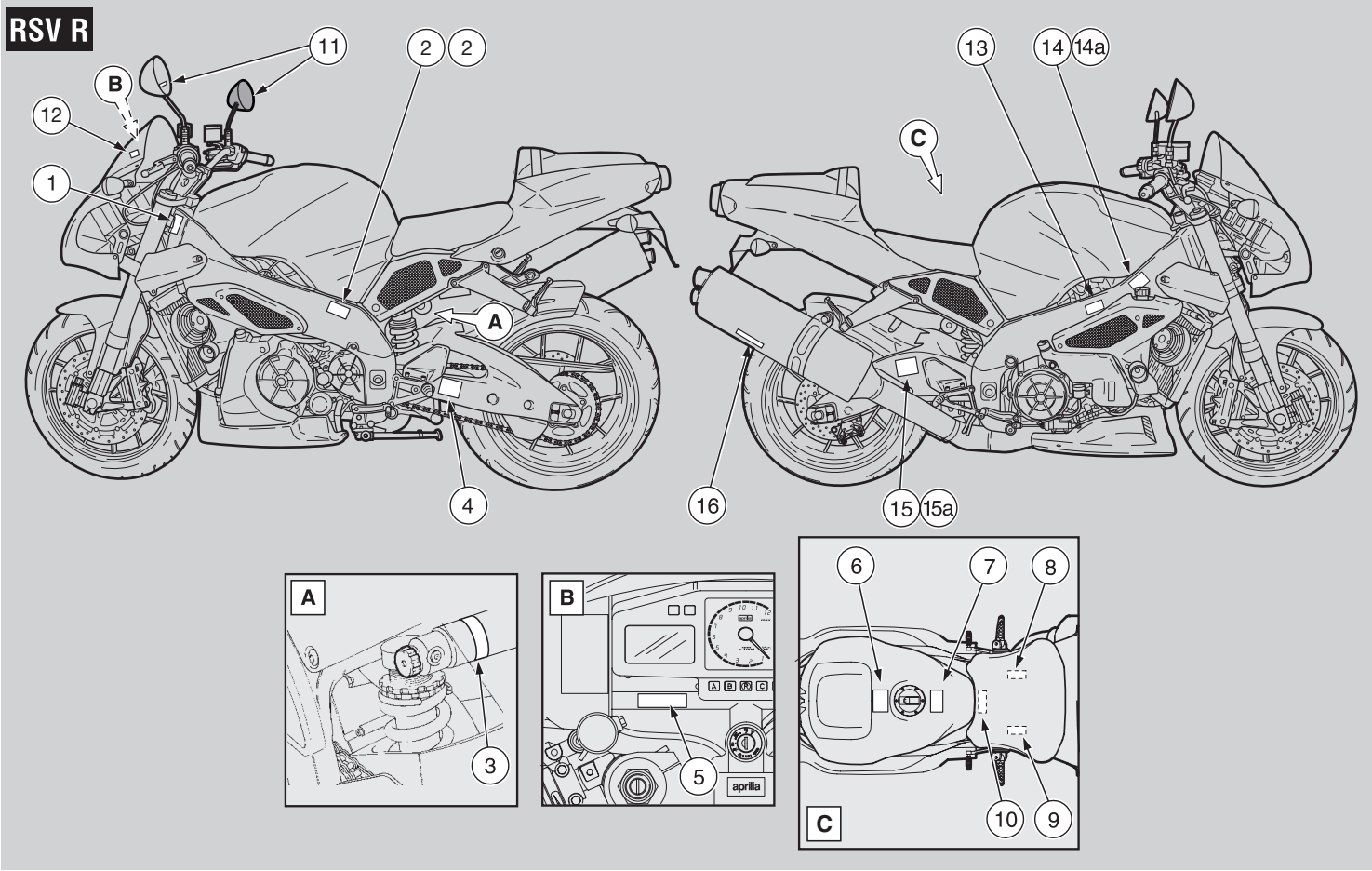

Downloaded from www.Manualslib.com manuals search engine

WARNING ADHESIVE LABELS CHART q

Ref.	Description
1	**Manufacturer by Aprilia S.p.A.** GVWR: 884 lbs. GAWR: F 335 lbs. with 120/70 ZR 17 • 120/65 ZR 17 tire, 17 x MT 3.50 rim at 34.8 psi COLD GAWR: R 549 lbs. with 180/55 ZR 17 • 190/50 ZR 17 tire, 17 x MT 6.00 rim at 39.15 psi COLD This vehicle conforms to all applicable Federal Motor Vehicle Safety Standards in effect on the date of manufacturer shown above. MOTORCYCLE *-RPU-* *-RPC-*
2	**NOT PROVIDED FOR 49 STATES.**
2a	**FOR STATE OF CALIFORNIA ONLY.** *EVAP FAMILY: 3ASPE0024MLA* *HOSE ROUTING DIAGRAM* *Aprilia S.p.A.* *-RPC-* FUEL TANK CONNECTION ON THE FRAME LOWER PLASTIC COVER ONE WAY VALVE "Y" THREE WAY CONNECTOR AIR PURGE CONTROL VALVE TO THE FUEL CONTROL VALVE AIR BOX "T" THREE WAY CONNECTOR MANIFOLD VACUUM PORT. "T" THREE WAYS CONNECTOR NARROW PASSAGE CARBON CANISTER AIR
3	⚠ *WARNING!* ● CONTAINS HIGH PRESSURE NITROGEN GAS. ● SEE WORKSHOP MANUAL FOR DISPOSAL AND ADJUSTING UNIT. ● *DO NOT OPEN. DO NOT INCINERATE.* INCINERATION, PUNCTURE OR DISASSEMBLY MAY CAUSE THIS UNIT TO EXPLODE.

Ref.	Description
4	⚠ *WARNING!* *Do not use any tire other than those recommended and approved by Aprilia. Maintain proper tire inflation. Do not use any tire with less than 1/8" (3mm) tread remaining. Do not repair any tire, nor use a repaired tire. Do not ride your motorcycle overloaded or with an unbalanced load. Failure to follow these warnings can lead to an accident and serious injuries or death. Always ensure that the chain is correctly adjusted. See owner's manual.* *-RPU-* *-RPC-* aprilia CHAIN TENSION WITH NO LOAD 25 mm Tires pressure bar - (psi): Front tire / Rear tire 2.2 (31.9) / 2.5 (36.25) 2.4 (34.8) / 2.7 (39.15) 2.4 (34.8) / 2.7 (39.15) Tires size: Front tire: Pirelli - Metzeler, Dunlop: 120/70 ZR 17", 120/65 ZR 17" Rear tire: Pirelli - Metzeler, Dunlop: 180/55 ZR 17", 190/50 ZR 17"
5	⚠ *WARNING!* DO NOT ALLOW KEY CHAIN AND ANY OTHER ITEM TO FALL BETWEEN THE STEERING HEAD AND THE BODY OF MOTORCYCLE. THIS CAN CAUSE LOSS OF CONTROL.
6	⚠ *WARNING!* • *Wear a helmet, eye protection, and bright protective clothing.* • *Don' t ride after consuming alcohol or other drugs.* • *Slow down on slippery surface, unfamiliar terrain or when visibility is reduced.* • *Read owner's manual carefully* • *Failure to follow these warnings can lead to an accident and serious injuries or death.* • *USE UNLEADED FUEL MINIMUM OCTANE RATING (R + M) / 2 METHOD 90.* • *See owner's manual for the correct running in and maintenance of the vehicle.*
7	⚠ *WARNING!* *Never install accessories or replacement parts not approved by Aprilia as original equipment. This can degrade the handling and safety of your motorcycle, and can cause an upset with subsequent accident and serious injury or even death. The stability and safety of any motorcycle is adversely affected by the addition of any load carrying accessory. See owner's manual.*

to be continued

Downloaded from www.Manualslib.com manuals search engine

Ref.	Description
8	**⚠ WARNING!** **This vehicle is designed for one rider only . Do not carry a passenger and any kind of luggage. To do so will seriously compromise the safety of the motorcycle and can result in personal injury or death.** aprilia
9	**aprilia** BATTERY SERVICE **⚠ WARNING!** + − MAX min Maintain electrolyte level between the two level marks. Use only distilled water. Always keep the battery charged. **Never disconnect the battery or regulator with the engine running. This will destroy the entire electrical system.**
10	**aprilia** *SPARE PARTS IDENTIFICATION* YEAR: Y 1 2 3 4 I.M.: A B C D E I UK A P SF B D F E GR NL CH DK J SGP SLO IL ROK MAL RCH HR AUS USA BR RSA NZ CDN
11	**⚠ WARNING!** ***Contain sulfuric acid which can cause severe injuries. Avoid contact with skin, eyes or clothing. Antidote: EXTERNAL - Flush with water. INTERNAL - Drink large quantities of water or milk. Follow with milk of magnesia, beaten egg or veg. oil. Call physician immediately. Eyes: Flush with water for 15 minutes and get prompt medical attention.*** ***KEEP OUT OF REACH OF CHILDREN.*** ***Batteries produce explosive gases. Keep sparks, flames, cigarettes away. Charge only in well-ventilated space. Always wear protective goggles when working around batteries. Always connect the battery vent tube. Failure to heed this warning will cause corrosion of the electrical system.***

Ref.	Description
12	OBJECTS IN MIRROR ARE CLOSER THAN THEY APPEAR.
13	**⚠ WARNING!** • *Keep windshield clean at all times.* • *Clean only with a soft cloth and warm water with a mild detergent.* • *Replace windshield if becomes scratched or discoloured so as to interfere with view.* • *Do not allow any alcaline or strong acid cleaner, gasoline, brake fluid or any other solvent to contact the windshield.* • *When replacing windshield, use only Aprilia original replacement windshield.*
14	**⚠ WARNING!** ***DO NOT REMOVE THE CAP UNTIL THE ENGINE IS ENTIRELY COOL. COOLANT IS HOT AND UNDER PRESSURE. FAILURE TO OBSERVE THIS WARNING MAY LEAD TO SERIOUS BURNS. USE ONLY FLUID FOR SEALED CIRCUITS. USE ONLY ANTIFREEZE AND ANTICORROSIVE WITHOUT NITRATE, ENSURING PROTECTION -35°C AT LEAST.***
15	*MOTORCYCLE NOISE EMISSION CONTROL INFORMATION* *THIS 2003 ASP42B0998 MOTORCYCLE, 8119582* *MEETS EPA NOISE EMISSION REQUIREMENTS OF 80 dBA* *AT 5088 closing r.p.m. BY FEDERAL TEST PROCEDURE.* *MODIFICATIONS WHICH CAUSE THIS MOTORCYCLE TO EXCEED FEDERAL NOISE STANDARDS ARE PROHIBITED BY FEDERAL LAW.* *SEE OWNER'S MANUAL.* ***RPU - RPC*** aprilia
15a	**FOR STATE OF CALIFORNIA ONLY.** *MOTORCYCLE NOISE EMISSION CONTROL INFORMATION* *THIS 2003 ASP42B0998 MOTORCYCLE, 8119582* *MEETS EPA NOISE EMISSION REQUIREMENTS OF 80 dBA* *AT 5088 closing r.p.m. BY FEDERAL TEST PROCEDURE.* *MODIFICATIONS WHICH CAUSE THIS MOTORCYCLE TO EXCEED FEDERAL NOISE STANDARDS ARE PROHIBITED BY FEDERAL LAW.* *SEE OWNER'S MANUAL.* ***RPU - RPC*** aprilia

to be continued

Downloaded from www.Manualslib.com manuals search engine

Ref.	Description
16	VEHICLE EMISSION CONTROL INFORMATION -RPC- ENGINE DISPLACEMENT: 998 cc ENGINE FAMILY: 3ASPC0.99MEA THIS VEHICLE CONFORMS TO U.S. EPA REGULATIONS APPLICABLE TO 2003 MODEL YEAR NEW MOTORCYCLES. ENGINE EXHAUST CONTROL SYSTEM: N/A ENGINE TUNE UP SPECIFICATIONS IGNITION TIMING: 21.8° ± 2° AT 2800 RPM IDLE SPEED: 1250 ± 100 RPM IN NEUTRAL VALVE CLEARANCE: INLET 0.005÷0.006 inch (0.12÷0.17 mm) OUTLET 0.009÷0.011 inch (0.23÷0.28 mm) SPARK PLUG: NGK R DCPR9E FUEL: MINIMUM OCTANE RATING (M+R)/2 METHOD 90 OIL: ENGINE OIL VISCOSITY SAE 15W-50 Aprilia S.p.A. Via G.Galilei 1 30033 Noale (VE) ITALY aprilia
16a	**FOR STATE OF CALIFORNIA ONLY.** VEHICLE EMISSION CONTROL INFORMATION -RPC- ENGINE DISPLACEMENT: 998cc ENGINE FAMILY: 3 ASPC0.99MEA THIS VEHICLE CONFORMS TO U.S. EPA AND CALIFORNIA REGULATIONS APPLICABLE TO 2003 MODEL YEAR NEW MOTORCYCLES AND IS CERTIFIED TO 1.4 HC G/KM ENGINE FAMILY EXHAUST EMISSION STANDARD IN CALIFORNIA. ENGINE EXHAUST CONTROL SYSTEM: OC ENGINE TUNE UP SPECIFICATIONS IGNITION TIMING: 21.8° ± 2° AT 2800 RPM IDLE SPEED: 1250 ± 100 RPM IN NEUTRAL VALVE CLEARANCE: INLET 0.005÷0.006 inch (0.12÷0.17 mm) OUTLET 0.009÷0.011 inch (0.23÷0.28 mm) SPARK PLUG: NGK R DCPR9E FUEL: MINIMUM OCTANE RATING (M+R)/2 METHOD 90 OIL: ENGINE OIL VISCOSITY SAE 15W-50 Aprilia S.p.A. Via G.Galilei 1 30033 Noale (VE) ITALY aprilia
17	Muffler stamping.

Downloaded from www.Manualslib.com manuals search engine

CALIFORNIA EVAPORATIVE EMISSION SYSTEM R

FOR STATE OF CALIFORNIA ONLY.

The system consists of:

1) Fuel tank
2) Fuel pump flange
3) Fuel tank breather line
4) Breather line (to tee)
5) Tee
6) Breather line (to purge valve)
7) Purge valve
8) Breather line (to carbon canister)
9) Carbon canister
10) Drain line (to narrow passage)
11) Restrictor Ø 0.06 in (Ø 1.5 mm)
12) Drain line (to manifold vacuum port)
13) Manifold vacuum port (right front part of throttle body)
14) Vacuum line (from purge valve)
15) Tee
16) Sensor line
17) Fuel pressure regulator
18) Vacuum line (to ported vacuum port)
19) Ported vacuum port (left rear part of throttle body)
20) Air box
21) Warm air inlet (from air box)
22) Tee
23) Warm air inlet (to one way valve)
24) One way valve
25) Warm air inlet (from one way valve)
26) Warm air inlet (to carbon canister)

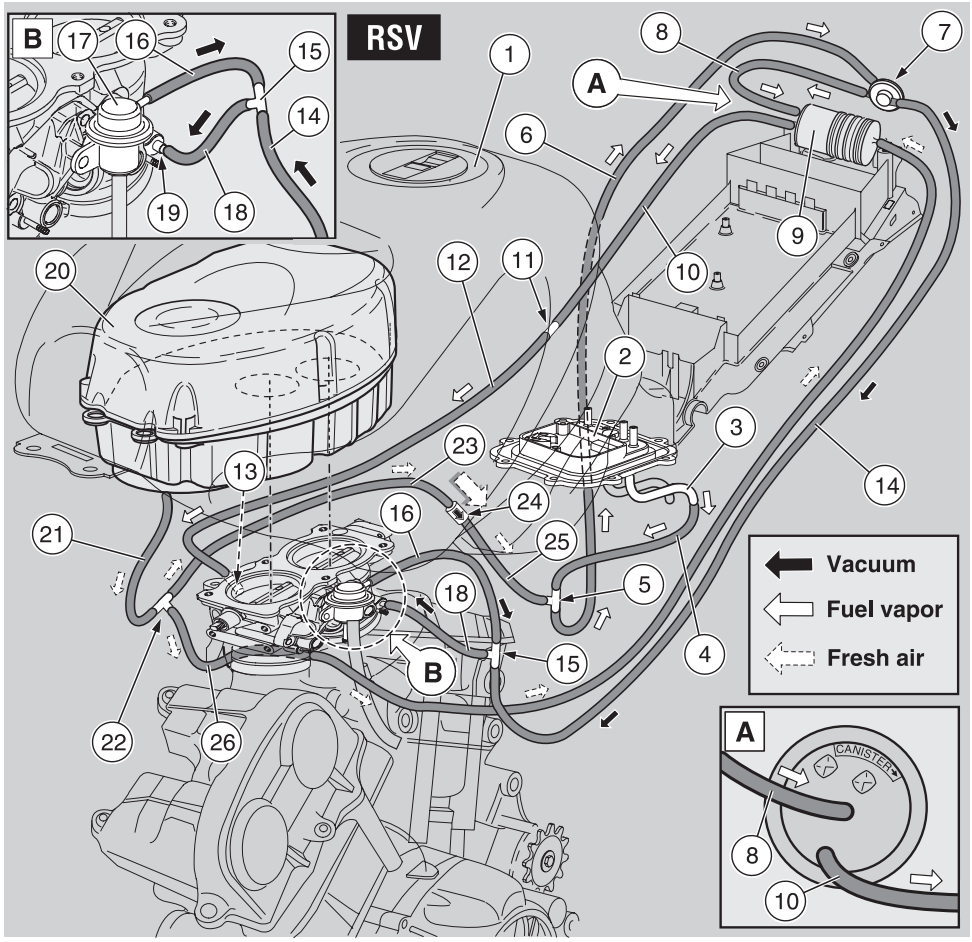

NOTE In case of malfunction of the fuel system, contact your local **aprilia Dealer**.

Downloaded from www.Manualslib.com manuals search engine

CALIFORNIA EVAPORATIVE EMISSION SYSTEM q

FOR STATE OF CALIFORNIA ONLY.

The system consists of:

1) Fuel tank
2) Fuel pump flange
3) Fuel tank breather line
4) Breather line (to tee)
5) Tee
6) Breather line (to purge valve)
7) Purge valve
8) Breather line (to carbon canister)
9) Carbon canister
10) Drain line (to narrow passage)
11) Restrictor Ø 0.06 in (Ø 1.5 mm)
12) Drain line (to manifold vacuum port)
13) Manifold vacuum port (right front part of throttle body)
14) Vacuum line (from purge valve)
15) Tee
16) Sensor line
17) Fuel pressure regulator
18) Vacuum line (to ported vacuum port)
19) Ported vacuum port (left rear part of throttle body)
20) Air box
21) Warm air inlet (from air box)
22) Tee
23) Warm air inlet (to one way valve)
24) One way valve
25) Warm air inlet (from one way valve)
26) Warm air inlet (to carbon canister)

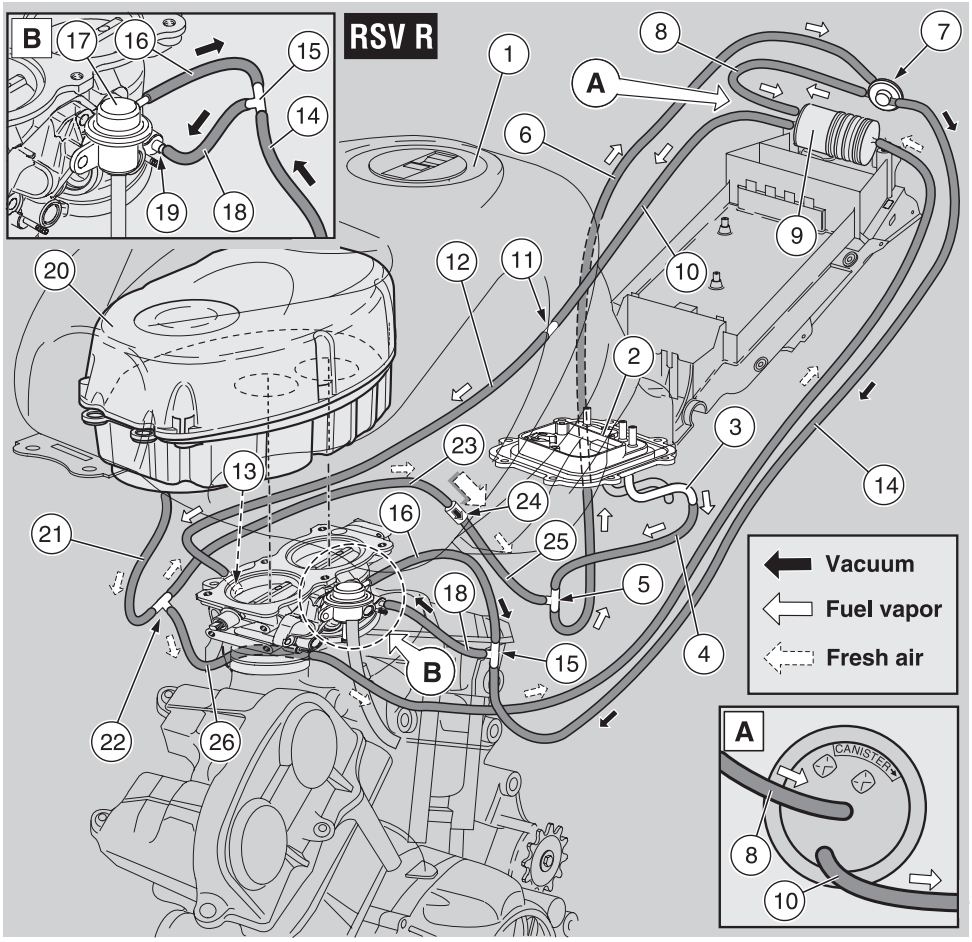

NOTE In case of malfunction of the fuel system, contact your local **aprilia Dealer**.

Downloaded from www.Manualslib.com manuals search engine

aprilia s.p.a. - EMISSION CONTROL SYSTEM WARRANTY STATEMENT

YOUR WARRANTY RIGHTS AND OBLIGATIONS

The California Air Resources Board and **aprilia s.p.a.** (hereinafter "**aprilia**") are pleased to explain the emission control system warranty on your 1999 and later motorcycle. In California new motor vehicles must be designed, built and equipped to meet the State's stringent anti-smog standards. **aprilia** must warrant the emission control system on your motorcycle for the periods of time listed below provided there has been no abuse, neglect or improper maintenance of your motorcycle.

Your emission control system may include parts such as the carburetor or fuel injection system, the ignition system, catalytic converter and engine computer. Also included may be hoses, belts, connectors and other emission-related assemblies.

Where a warrantable condition exists, **aprilia** will repair your motorcycle at no cost to you, including diagnosis, parts and labor.

MANUFACTURER'S EMISSIONS SYSTEM WARRANTY COVERAGE

Class I motorcycles (50 - 169 cu. cm): for a period of use of five (5) years or 7,456 miles (12,000 kilometers), whichever occurs first.

Class II motorcycles (170 - 279 cu. cm): for a period of use of five (5) years or 11,185 miles (18,000 kilometers), whichever occurs first.

Class III motorcycles (280 cu. cm and larger): for a period of use of five (5) years or 18,641 miles (30,000 kilometers), whichever occurs first.

If an emission-related part on your motorcycle is defective, the part will be repaired or replaced by **aprilia**. This is your emission control system DEFECTS WARRANTY.

OWNER'S WARRANTY RESPONSIBILITIES

– As the motorcycle owner, you are responsible for the performance of the required maintenance listed in your owner's manual. **aprilia** recommends that you retain all receipts covering maintenance on your motorcycle, but **aprilia** cannot deny warranty solely for the lack of receipts or for your failure to ensure the performance of all scheduled maintenance.

– You are responsible for presenting your motorcycle to an **aprilia dealer** as soon as a problem exists. The warranty repairs should be completed in a reasonable amount of time, not to exceed 30 days.

– As the motorcycle owner, you should be aware that **aprilia** may deny your warranty coverage if your motorcycle or a part has failed due to abuse, neglect, improper maintenance or unapproved modifications.

If you have any questions regarding your warranty rights and responsibilities, you should contact **aprilia USA, Inc.**, 10933 Crabapple Road, Suite 100, Roswell, GA 3007, or the **California Air Resources Board** at P.O. Box 8001, 9528 Telstar Avenue, El Monte, CA 91734-8001.

Downloaded from www.Manualslib.com manuals search engine

aprilia s.p.a. - LIMITED WARRANTY ON EMISSION CONTROL SYSTEM

aprilia s.p.a., Via G. Galilei, 1, 30033 Noale (VE) Italy (hereinafter "**aprilia**") warrants that each new 1999 and after **aprilia** motorcycle, that includes as standard equipment a headlight, taillight and stoplight, and is street legal:

A. is designed, built and equipped so as to conform at the time of initial retail purchase with all applicable regulations of the United States Environmental Protection Agency, and the California Air Resources Board; and

B. is free from defects in material and workmanship which cause such motorcycle to fail to conform with applicable regulations of the United States Environmental Protection Agency or the California Air Resources Board for a period of use, depending on the engine displacement, of 7,456 miles (12,000 kilometers), if the motorcycle's engine displacement is less than 170 cubic centimeters; of 11,185 miles (18,000 kilometers), if the motorcycle's engine displacement is equal to or greater than 170 cubic centimeters but less than 280 cubic centimeters; or of 18,641 miles (30,000 kilometers), if the motorcycle's engine displacement is 280 cubic centimeters or greater; or 5 (five) years from the date of initial retail delivery, whichever first occurs.

I. COVERAGE. Warranty defects shall be remedied during customary business hours at any authorized **aprilia** motorcycle dealer located within the United States of America in compliance with the Clean Air Act and applicable regulations of the United States Environmental Protection Agency and the California Air Resources Board. Any part or parts replaced under this warranty shall become the property of **aprilia**.

In the State of California only, emission related warranted parts are specifically defined by the state's Emission Warranty Parts List. These warranted parts are: carburetor and internal parts; intake manifold; fuel tank; fuel injection system; spark advance mechanism; crankcase breather; air cutoff valves; fuel tank cap for evaporative emission controlled vehicles; oil filler cap; pressure control valve; fuel/vapor separator; canister; igniters; breaker governors; ignition coils; ignition wires; ignition points; condensers, and spark plugs if failure occurs prior to the first scheduled replacement; and hoses, clamps, fittings and tubing used directly in these parts. Since emission related parts may vary from model to model, certain models may not contain all of these parts and certain models may contain functionally equivalent parts.

In the State of California only, Emission Control System emergency repairs, as provided for in the California Administrative Code, may be performed by other than an authorized **aprilia dealer**. An emergency situation occurs when an authorized **aprilia dealer** is not reasonably available, a part is not available within 30 days, or a repair is not complete within 30 days. Any replacement part can be used in an emergency repair. **aprilia** will reimburse the owner for the expenses, including diagnosis, not to exceed **aprilia**'s suggested retail price for all warranted parts replaced and labor charges based on **aprilia**'s recommended time allowance for the warranty repair and the geographically appropriate hourly labor rate. The owner may be required to keep receipts and failed parts in order to receive compensation.

II. LIMITATIONS. This Emission Control System warranty shall not cover any of the following:

A. Repair or replacement required as a result of
(1) accident,
(2) misuse,
(3) repairs improperly performed or replacements improperly installed,
(4) use of replacement parts or accessories not conforming to **aprilia** specifications which adversely affect performance and/or
(5) use in competitive racing or related events.

Downloaded from www.Manualslib.com manuals search engine

B. Inspections, replacement of parts and other services and adjustments required for required maintenance.

C. Any motorcycle on which the odometer mileage has been changed so that actual mileage cannot be readily determined.

III. LIMITED LIABILITY

A. The liability of **aprilia** under this Emission Control System Warranty is limited solely to the remedying of defects in material or workmanship by an authorized **aprilia** motorcycle dealer at its place of business during customary business hours. This warranty does not cover inconvenience or loss of use of the motorcycle or transportation of the motorcycle to or from the **aprilia dealer**. **aprilia** SHALL NOT BE LIABLE FOR ANY OTHER EXPENSES, LOSS OR DAMAGE, WHETHER DIRECT, INCIDENTAL, CONSEQUENTIAL OR EXEMPLARY ARISING IN CONNECTION WITH THE SALE OR USE OF OR INABILITY TO USE THE **aprilia** MOTORCYCLE FOR ANY PURPOSE. SOME STATES DO NOT ALLOW THE EXCLUSION OR LIMITATION OF ANY INCIDENTAL OR CONSEQUENTIAL DAMAGES, SO THE ABOVE LIMITATIONS MAY NOT APPLY TO YOU.

B. NO EXPRESS EMISSION CONTROL SYSTEM WARRANTY IS GIVEN BY **aprilia** EXCEPT AS SPECIFICALLY SET FORTH HEREIN. ANY EMISSION CONTROL SYSTEM WARRANTY IMPLIED BY LAW, INCLUDING ANY WARRANTY OF MERCHANTABILITY OR FITNESS FOR A PARTICULAR PURPOSE, IS LIMITED TO THE EXPRESS EMISSION CONTROL SYSTEM WARRANTY TERMS STATED IN THIS WARRANTY. THE FOREGOING STATEMENTS OF WARRANTY ARE EXCLUSIVE AND IN LIEU OF ALL OTHER REMEDIES. SOME STATES DO NOT ALLOW LIMITATIONS ON HOW LONG AN IMPLIED WARRANTY LASTS SO THE ABOVE LIMITATIONS MAY NOT APPLY TO YOU.

C. No dealer is authorized to modify this **aprilia** Limited Emission Control System Warranty.

IV. LEGAL RIGHTS. THIS WARRANTY GIVES YOU SPECIFIC LEGAL RIGHTS, AND YOU MAY ALSO HAVE OTHER RIGHTS WHICH VARY FROM STATE TO STATE.

V. THIS WARRANTY IS IN ADDITION TO THE **aprilia** LIMITED MOTORCYCLE WARRANTY.

VI. ADDITIONAL INFORMATION. Any replacement part that is equivalent in performance and durability may be used in the performance of any maintenance or repairs. However, **aprilia** is not liable for these parts. The owner is responsible for the performance of all required maintenance. Such maintenance may be performed at a service establishment or by any individual. The warranty period begins on the date the motorcycle is delivered to an ultimate purchases.

aprilia s.p.a.
Via G. Galilei, 1
30033 Noale (VE) Italy

aprilia USA, Inc.
109 Smoke Hill, Lane Suite 90
Woodstock, GA 30188

Downloaded from www.Manualslib.com manuals search engine

GENERAL INSTRUCTIONS

H The operations preceded by this symbol must be repeated also on the opposite side of the vehicle.

If not expressly indicated otherwise, for the reassembly of the units repeat the disassembly operations in reverse order.

The terms “right” and “left” are referred to the rider seated on the vehicle in the normal riding position.

⚠ WARNING

The competition adjustment must be used in organized racing or circular course competitive event, under the auspices of a recognized sanctioning body or by permit issued by the local governmental authority having jurisdiction.

It is strictly forbidden to use the competition adjustment while riding the vehicle on public streets, roads, or highways.

⚠ WARNING

Never carry any parcels on the glove/tool kit compartment cover J; small parcels may be carried only on the passenger seat, see p. 51 (LUGGAGE RACK FASTENINGS).

Failure to heed these warnings may lead to a serious accident with consequent risk of serious injury or even death.

In the text and/or showns the symbol (e.i. J) preceded by the symbol of the model (e.i. y) refer exclusively to the model indicated.

Example: y J in a text and/or shown is to be intended as optional only to the y model.

NOTE Soon after purchasing the vehicle, write down the identification data provided in the SPARE PARTS IDENTIFICATION LABEL in the table below. This label is positioned on the left part of the frame; to be able to read it, remove the rider seat, see 106 (REMOVING THE RIDER SEAT).

aprilia									
SPARE PARTS IDENTIFICATION	YEAR	Y	1	2	3	4			
	I.M.	A	B	C	D	E			
I	UK	A	P	SF	B	D	F	E	GR
NL	CH	DK	J	SGP	SLO	IL	ROK	MAL	RCH
HR	AUS	USA	BR	RSA	NZ	CDN			

These data indicate:

– YEAR = year of manufacture (Y, 1, 2, …);
– M. = modification code (A, B, C, …);
– COUNTRY CODE = country of homologation (I, UK, A, …).

and are to be supplied to the **aprilia Official Dealer** as reference data for the purchase of spare parts or specific accessories of the model you have acquired.

In this manual the various versions are indicated by the following symbols:

R **RSV mille model**

q **RSV mille R model**

i **catalytic version**

g **optional**

VERSION:

H	**Italy**	O	**Singapore**
Q	**United Kingdom**	m	**Slovenia**
[	**Austria**	c	**Israel**
j	**Portugal**	£	**South Korea**
E	**Finland**	J	**Malaysia**
A	**Belgium**	]	**Chile**
^	**Germany**	G	**Croatia**
`	**France**	@	**Australia**
D	**Spain**	o	**United States of America**
F	**Greece**	¥	**Brazil**
L	**Holland**	N	**South Africa**
S	**Switzerland**	h	**New Zealand**
C	**Denmark**	B	**Canada**
I	**Japan**		

Downloaded from www.Manualslib.com manuals search engine

CONTENTS

FOREWORD **2**
INTRODUCTION **2**
MAIN INDEPENDENT CONTROLS **2**
STEERING LOCK 2
SAFETY WARNINGS **3**
GENERAL SAFETY RULES **3**
CARBON MONOXIDE 3
GASOLINE 3
HOT COMPONENTS 3
USED ENGINE OIL 3
BRAKE FLUID 4
CLUTCH FLUID 4
COOLANT 4
BATTERY HYDROGEN GAS AND ELECTROLYTE 4
WARNINGS - PRECAUTIONS - GENERAL ADVICE **5**
REPORTING OF DEFECTS THAT AFFECT SAFETY 5
ROAD REGULATIONS AND USE OF THE VEHICLE 5
NOISE EMISSION WARRANTY 5
INFORMATION ON THE NOISE AND EXHAUST GAS EMISSION CONTROL SYSTEM 5
TAMPERING WARNING 5
VEHICLE IDENTIFICATION NUMBER (V.I.N.) (FRAME NUMBER) 6
INFORMATION CONTAINED IN THE VEHICLE IDENTIFICATION NUMBER 6
POSITION OF THE WARNING ADHESIVE LABELS R 8
WARNING ADHESIVE LABELS CHART R 9
POSITION OF THE WARNING ADHESIVE LABELS q 12
WARNING ADHESIVE LABELS CHART q 13
CALIFORNIA EVAPORATIVE EMISSION SYSTEM R 16
CALIFORNIA EVAPORATIVE EMISSION SYSTEM q 17
APRILIA S.P.A. - EMISSION CONTROL SYSTEM WARRANTY STATEMENT 18
APRILIA S.P.A. - LIMITED WARRANTY ON EMISSION CONTROL SYSTEM 19
GENERAL INSTRUCTIONS **21**
BASIC SAFETY RULES 24
CLOTHING 29
ACCESSORIES 30
LOAD 30
LOCATION OF KEY COMPONENTS **32**
LOCATION OF KEY COMPONENTS **34**
ARRANGEMENT OF THE INSTRUMENTS/ CONTROLS **36**
INSTRUMENTS AND INDICATORS **37**
INSTRUMENTS AND INDICATORS TABLE 38
MULTIFUNCTION COMPUTER 40
MAIN INDEPENDENT CONTROLS **46**
CONTROLS ON LEFT HANDLEBAR 46
CONTROLS AT THE RIGHT HAND GRIP 47
IGNITION SWITCH 48
STEERING LOCK 48
STEERING LOCK 49
PARKING LIGHTS 49
UNLOCKING/LOCKING THE PASSENGER SEAT 50
GLOVE/TOOL KIT COMPARTMENT 50
LUGGAGE RACK FASTENINGS 51
SPECIAL TOOLS g 52
ACCESSORIES 52
NUMBER PLATE-HOLDER EXTENSION g 52
MAIN COMPONENTS **53**
FUEL 53
LUBRICANTS 55
BRAKES 56
DISC BRAKES 57
FRONT BRAKE 58
REAR BRAKE 59
CLUTCH FLUID - RECOMMENDATIONS 61
CLUTCH 62
COOLANT 63
TIRES 65
ENGINE OIL 66
ADJUSTING THE FRONT BRAKE CONTROL LEVER AND THE CLUTCH CONTROL LEVER 67
ADJUSTING THE REAR BRAKE CONTROL LEVER CLEARANCE 67
ADJUSTING THE REAR BRAKE CONTROL LEVER AND THE GEAR SHIFT LEVER 68
EXHAUST SILENCER/EXHAUST TERMINAL 68
INSTRUCTIONS FOR USE **69**
GETTING ON AND OFF THE VEHICLE 69
PRELIMINARY CHECKING OPERATIONS 71
PRELIMINARY CHECKING OPERATIONS 73
STARTING 74
DEPARTURE AND DRIVE 77
RUNNING-IN 80
STOPPING 81
PARKING 81
POSITIONING THE VEHICLE ON THE STAND 82
SUGGESTIONS TO PREVENT THEFT 82
MAINTENANCE **83**
REGULAR SERVICE INTERVALS CHART 85
KEY 85
MAINTENANCE RECORD 87
IDENTIFICATION DATA 91
JOINTS WITH CLICK CLAMPS AND WITH SCREW CLAMPS 91
CHECKING THE ENGINE OIL LEVEL AND TOPPING UP 91
CHANGING THE ENGINE OIL AND THE OIL FILTER 93
AIR CLEANER 95
ASSEMBLING THE PINS FOR THE REAR SERVICE STAND g 96
POSITIONING THE VEHICLE ON THE REAR SERVICE STAND g 96
POSITIONING THE VEHICLE ON THE FRONT SERVICE STAND g 96
FRONT WHEEL 97
FRONT BRAKE CALIPERS R 99
FRONT BRAKE CALIPERS q 100
REAR WHEEL 101
DRIVE CHAIN 104
REMOVING THE RIDER SEAT 106
LIFTING THE FUEL TANK 106
REMOVING THE SIDE FAIRINGS 107
REMOVING THE LOWER FAIRING 107
REMOVING THE SIDE BODY PANELS 107
REMOVING THE REAR-VIEW MIRRORS 108
REMOVING THE FRONT FAIRING 109
REMOVING THE SIDE STAND 110
INSPECTING THE FRONT AND REAR SUSPENSIONS 112
FRONT SUSPENSION 112
REAR SUSPENSION 116
CHECKING THE BRAKE PAD WEAR 118
ADJUSTING THE COLD START CONTROL (/) 119
IDLING ADJUSTMENT 119
ADJUSTING THE THROTTLE CONTROL 119
SPARK PLUGS 120
CHECKING THE SIDE STAND 122
BATTERY 123
CHECKING AND CLEANING THE TERMINALS 123
REMOVING THE BATTERY 124
CHECKING THE ELECTROLYTE LEVEL 125
RECHARGING THE BATTERY 125
INSTALLING THE BATTERY 126
LONG INACTIVITY OF THE BATTERY 127
CHECKING THE SWITCHES 127
CHANGING THE FUSES 128
ADJUSTING THE VERTICAL HEADLIGHT BEAM 130
BULBS 131
CHANGING THE DASHBOARD BULBS 131
CHANGING THE HEADLIGHT BULBS 132
CHANGING THE FRONT AND REAR DIRECTION INDICATOR BULBS 134
CHANGING THE TAIL LIGHT BULB 135
TRANSPORT **136**
DRAINING THE FUEL TANK 136
CLEANING **137**
LONG PERIODS OF INACTIVITY 138
TECHNICAL DATA **140**
TIRES 142
LUBRICANT CHART 144
AUTHORISED DEALERS AND SERVICE CENTRES 145
IMPORTERS 146
IMPORTERS 147
IMPORTERS 148
WIRING DIAGRAM RSV MILLE - RSV MILLE R TUONO - 150
WIRING DIAGRAM KEY RSV MILLE - RSV MILLE R TUONO - 151

Downloaded from www.Manualslib.com manuals search engine

aprilia

safe drive

Downloaded from www.Manualslib.com manuals search engine

BASIC SAFETY RULES

The instructions given below cover normal operation of your vehicle and must be carefully observed. By following these rules you will enhance your own safety and the safety of those around you. You will also maximize the life and utility of your vehicle.

Two wheeled vehicles obviously do not provide some of the protection provided by automobiles, therefore it is essential that you wear appropriate protective clothing. Especially, never operate your vehicle without wearing your helmet, gloves, eye protection, a heavy jacket, sturdy footwear, and sturdy full length pants.

However, do not assume that even the best clothing and helmet will protect you in the event of an upset or a crash with another vehicle. At best, this gear provides some protection from scrapes and scratches, but very little, if any, impact protection.

Be sure that you meet all the requirements prescribed by local law, including driver's license, minimum age, training, insurance, taxes, vehicle registration, license plate, etc.

When you first receive your vehicle, practice by riding in areas where there is little traffic. Do not attempt to ride in heavy traffic until you are thoroughly experienced and riding your vehicle has become second nature to you.

Although this vehicle is legal for operation on freeways and expressways, it is

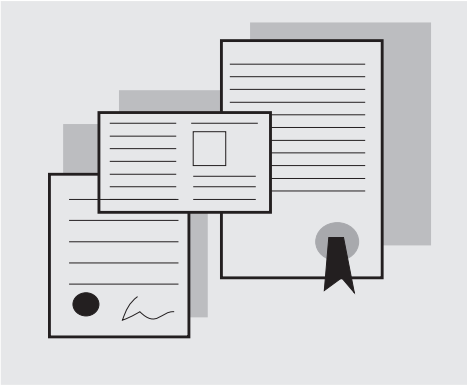

advisable to not ride on these high speed highways until you are thoroughly familiar with your vehicle, and have attained a high degree of skill in its operation.

A new vehicle must be carefully broken in, see p. 80 (RUNNING-IN).

Before starting the engine, make sure that the brakes, clutch, transmission and throttle controls function properly and that the fuel and oil supply is adequate.

The exhaust system, brakes, and some other parts of the vehicle become very hot during operation. Do not touch any of these parts.

Some medicines or drugs, illegal or under prescription, and alcohol significantly increase the risk of accidents. Do not ride while you are under the influence of alcohol or drugs, be they illicit or under prescription. Make sure you are in good physical condition and not ill before riding

your vehicle. Do not ride your vehicle when you are particularly tired or fatigued. Alcohol, drugs and fatigue are leading causes of vehicle accidents.

Many accidents are caused by the rider's inexperience and lack of training. Do not ride your vehicle until you have received training from a recognized training organization such as the Motorcycle Safety Foundation. Remember that riding a two wheeled vehicle, though easy and fun, is quite different from driving a car. Do not assume that you can operate your vehicle safely just because you are a competent automobile driver.

Never lend your vehicle to others unless you are sure that they are competent and properly licensed vehicle operators.

Downloaded from www.Manualslib.com manuals search engine

Observe all rules of the road. Particularly pay attention to all warning, regulatory and informational signs.

Avoid showing off (i.e., popping wheelies). Especially observe speed limits, remember that road conditions change with the weather and wet and icy pavements are particularly dangerous for vehicles, especially if you are riding too fast. Remember that automobile drivers have a hard time seeing two wheeled vehicles, so always give the automobile the right of way, even if it is legally yours.

Before changing lanes, look over your shoulder to make sure that the way is clear. Do not rely exclusively on the rear-view mirror: you may miscalculate the distance and speed of a vehicle, or you may even not see it at all.

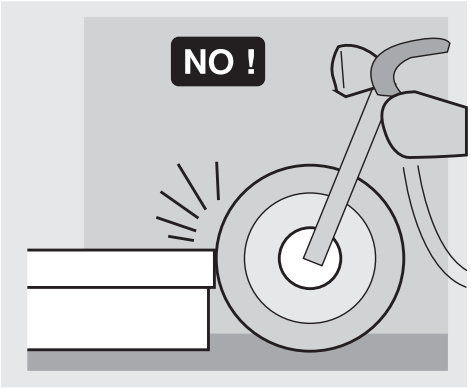

Avoid obstacles that could damage the vehicle or make you lose control.

Do not tailgate, do not attempt to increase your gas mileage by following in the slip stream of cars or trucks in front of you.

In case of accident motorcycles, scooters and mopeds do not provide the same degree of protection ensured by automobiles. The legs, in particular, are exposed the risk of being injured. However, the additional installation of leg guards may actually increase the risk of injuries and their seriousness in case of accident.

Do not install leg guards available on the market of spare parts and accessories. Non-compliance with these instructions may result in serious injuries or even death.

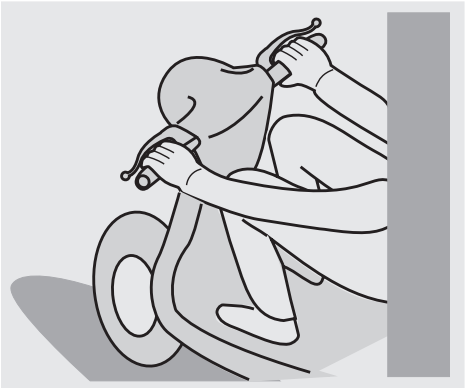

Always ride with both hands on the handlebars and feet on the footrests.

Never shift gear without using the clutch, if the vehicle is so equipped. Do not operate the shift lever or the other controls suddenly or abruptly. Such misuse can damage the internal components of the vehicle and consequently cause seizure, loss of control, accidents and serious injuries or even death.

Remain in the seat when you are riding. Do not stand up or attempt to stretch while you are riding your vehicle. If you need to rest, pull over to the side of the road when it can be safely done.

Downloaded from www.Manualslib.com manuals search engine

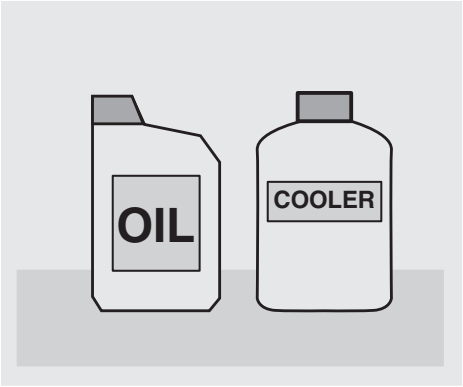

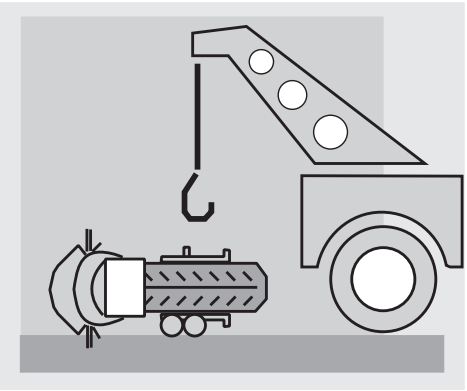

It is very important to your safety that you give full attention to the riding task. Watch what you are doing, do not allow yourself to be distracted by other cars, people or things on the roadside, etc. Never smoke, eat, drink, read, etc. while riding your vehicle. If you must consult a map, pull over when it can be done safely.

Use only the vehicle's specific fuels and lubricants indicated in the "LUBRICANT CHART"; check the oil, fuel and coolant levels regularly.

If the throttle sticks open, it may cause a collision with another vehicle, or an upset.

If the throttle sticks, kill the engine with the engine stop switch located on the right handlebar.

Do not attempt to restart the engine until the throttle has been repaired and works perfectly. Failure to obey this warning can lead to a runaway with seriously injuries or even death.

Your vehicle is equipped with a double cable throttle. One cable opens the throttle when you rotate the throttle grip toward you; the other closes the throttle when you rotate the grip away from you. It is essential, when you release the throttle grip, that it automatically return to the idle position. This double cable arrangement enhances safety by providing for positive closing of the throttle.

⚠ WARNING

In the event of a throttle sticking emergency, always kill the engine using the engine stop switch located near the throttle grip on the right handlebar. Never use your vehicle if the throttle does not automatically fully return to the idle position when the throttle grip is released. Contact your aprilia Official Dealer for repairs. Failure to heed this warning can lead to a serious accident and subsequent injury or even death.

If you and your vehicle are involved in an accident, insure that there has been no damage to the control levers, tubes, wires, braking system and other vital parts. If your vehicle is involved in an accident, take it immediately to your **aprilia Official Dealer** who has the equipment and knowledge to check for accidental damage which may compromise your safety.

Your **aprilia dealer** is ready and able to help you with any safety problems that you might have, but of course it is necessary for you to report any malfunctions to your mechanic in order for him to help you.

Do not use your vehicle if it is damaged. A damaged vehicle may become unstable or present other problems which can increase the risk of accident, and therefore of serious injury or even death.

Do not attempt to modify the position, angle or color of your license plate. Do not

Downloaded from www.Manualslib.com manuals search engine

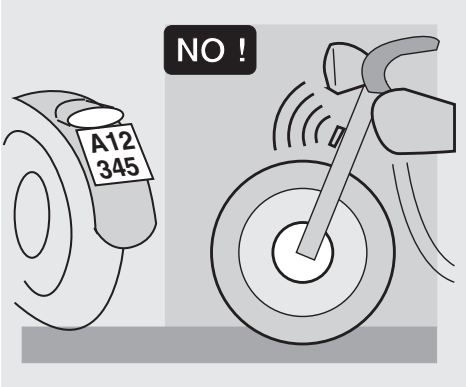

cover it with even a clear plastic covering. Do not modify any of the safety equipment of your vehicle, especially such safety related items as directional indicators, rear view mirrors, lights or horns.

Any modification to your vehicle will invalidate the warranty.

Do not modify your engine in an attempt to increase the horsepower. This can result in irreparable damage to the engine, as well as degradation of the performance and handling of the vehicle which could lead to an upset, and serious injury or even death.

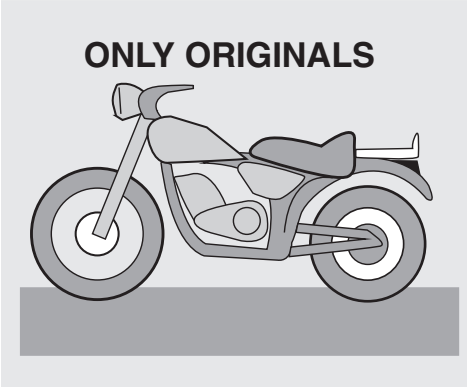

Have your vehicle repaired only with original parts, and use only original **aprilia** or **aprilia** approved accessories. The use of aftermarket accessories and parts can seriously compromise the safety of your vehicle as well as its performance and serviceability. Any modification which affects performance or safety voids your warranty completely.

Tampering with the emissions or noise control systems on your vehicle is against the law, and can be punished by large fines.

In some jurisdictions, it can even lead to the confiscation of your vehicle.

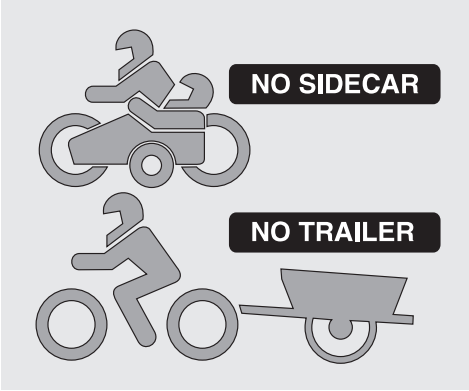

This vehicle was not designed to be equipped with a sidecar or to be used to tow trailers or other vehicles.

aprilia does not manufacture sidecars or trailers and therefore cannot predict the effects of such accessories on the manoeuvrability or stability of the vehicle: it can only warn that such effects may be negative and that any damage to the vehicle components caused by the use of such accessories will not be covered by the warranty.

Downloaded from www.Manualslib.com manuals search engine

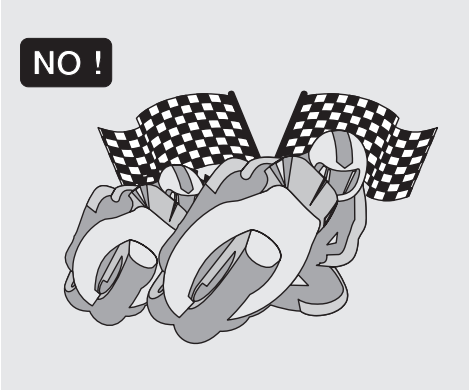

Never race other vehicles with your vehicle.

Brake with both the front and rear brakes. The use of one brake only for sudden braking may cause the vehicle to skid or make the rider lose control of the vehicle itself.

When riding down a steep hill, use the engine as a brake by selecting the same gear, or a lower gear, than you would use to climb the hill. Use front and rear brakes sparingly.

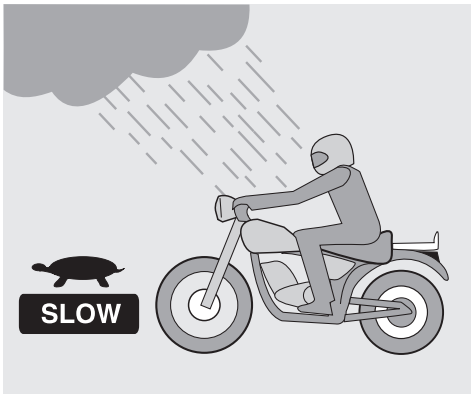

Always ride at the appropriate speed and avoid unnecessary hard acceleration. This not only is safer, but also reduces fuel consumption and increases the life of the vehicle.

If you must ride your vehicle in rainy weather, or on loose surfaces, remember that traction is greatly reduced. Under these conditions, all handling of the vehicle must be done gradually and smoothly. Sudden acceleration, braking or turning may make you lose control of your vehicle. When traction is reduced, accelerate and slow using your vehicle's engine braking insofar as possible. Avoid rapid, harsh application of the brakes.

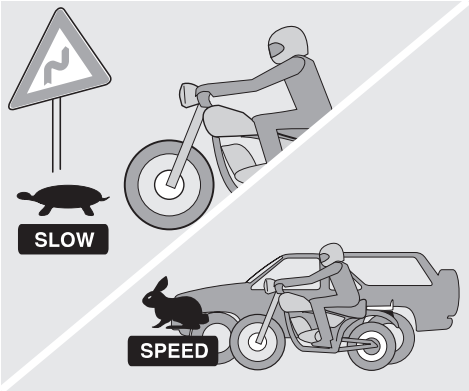

Gradually open and close the throttle, to avoid spinning or skidding the rear wheel.

On rough road surfaces, slow down and ride with particular care.

Try to avoid wide open throttle accelerations, unless they are necessary for such things as passing.

Don't allow your engine to "lug," that is, run at too low an rpm. Shift down to a lower gear. Also, don't over-rev the engine. Observe the redline on the tachometer.

Remember that excessively aggressive cornering can cause your vehicle's tires to lose sideways traction, which can result in an upset and serious injury or even death.

Downloaded from www.Manualslib.com manuals search engine

Always observe posted and statutory speed limits, but do not assume that you can ride as fast as the speed limit under all road conditions. Slowing down a little can greatly increase your safety under all road conditions.

Do not ride your vehicle off road.

Do not tamper with the muffler system or the emissions control system of your vehicle. This is not only bad for the environment, it can subject you to serious penalties.

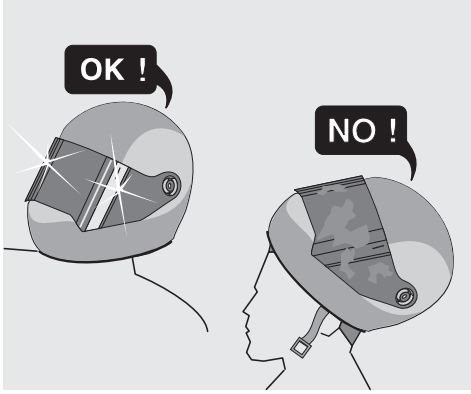

CLOTHING

Before riding your vehicle, ensure that your riding gear is in good condition. To be effective, your helmet must fit properly, and the visor or other eye protection must be clean.

Both research and experience have shown that drivers of other vehicles often do not see vehicles or riders. In order to make yourself more conspicuous to these drivers, wear bright reflective clothing, such as a reflective vest, or clothing with reflective sections sewn into the jacket, pants and gloves. Be particular aware of approaching automobiles and trucks that might be trying to turn left in front of you. Many vehicle accidents are caused by an opposing automobile driver making a left turn without warning in front of the vehicle.

Inevitably, the driver will look right at you, and yet swear that they did not see you before they turned directly into your path. Ride alert!

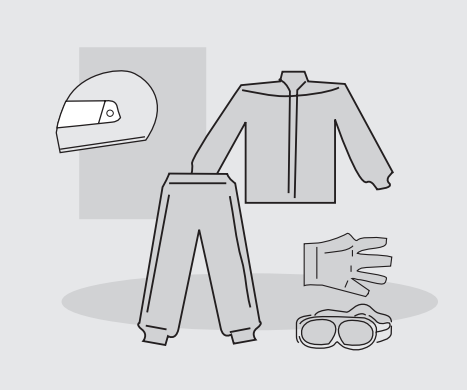

Wear protective clothing, preferably in light and/or reflecting colors. In this way you will make yourself more visible to the other drivers, thus notably reducing the risk of being knocked down, and you will be more protected in case of fall.

Always wear your crash helmet. Many accidents are fatal because of injuries to the head.

This clothing should be very tight-fitting and fastened at the wrists and ankles. Strings, belts and ties should not be hanging loose; prevent these and other objects from interfering with driving by getting entangled with moving parts or driving mechanisms.

Downloaded from www.Manualslib.com manuals search engine

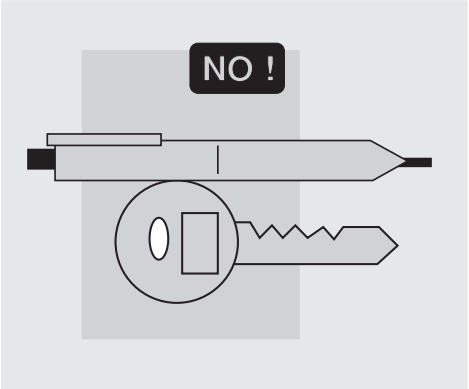

Do not carry sharp objects in your pockets that could be dangerous in case of an upset, for example, pens or mechanical pencils, etc. Also, make sure that your passengers follow this recommendation.

ACCESSORIES

The owner of the vehicle is responsible for the choice, installation and use of any accessory.

The installation of inappropriate accessories or the overloading of the vehicle may result in the instability of the vehicle itself and cause accidents with consequent risk of serious injuries or even death. Windshields could be particularly dangerous, as they can break and injure or cut the rider in case of accident. In case of doubts with regard to any accessory you would like to install or any load you would like to carry, previously consult your **aprilia Official Dealer**.

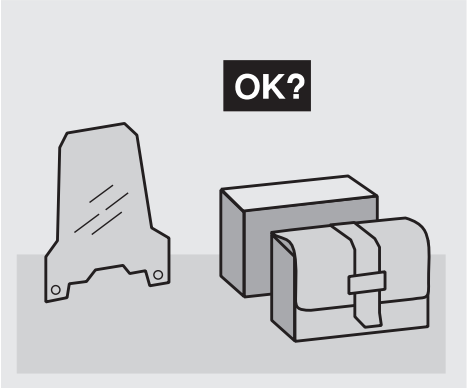

Avoid installing accessories that cover horns or lights or that could impair their functions, limit the suspension stroke and the steering angle, hamper the operation of the controls and reduce the distance from the ground and the angle of inclination in turns.
Avoid using accessories that hamper access to the controls, since this can prolong reaction times during an emergency.
Fairings and windshields installed on the vehicle may produce aerodynamic forces that will affect the stability of the vehicle during use, especially at high speeds.

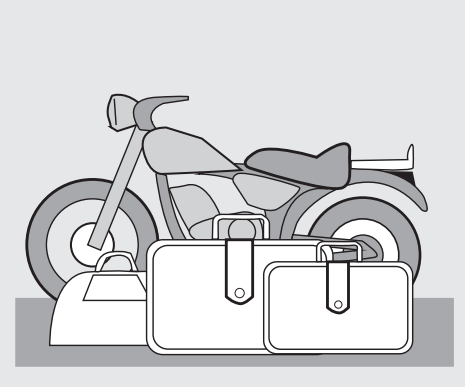

Make sure that anything you carry on your vehicle is securely attached, and cannot come lose and jam the wheels, forks, etc. Do not install any electrical accessories, and do not modify the electrical system of your vehicle. Anything that could cause an electrical overload or other fault could cause the vehicle to suddenly stop, the lights to dim or quit, or the horn and other safety accessories not to work. Use only **aprilia** genuine accessories.

LOAD

Do not overload your vehicle. Attach luggage or packages as close as possible to the center of your vehicle and distribute the load from side to side as evenly as possible, to keep imbalance to a minimum. Remember that loads tend to loosen with riding, so frequently check the security of your load.

Do not hang anything from your vehicle

Downloaded from www.Manualslib.com manuals search engine

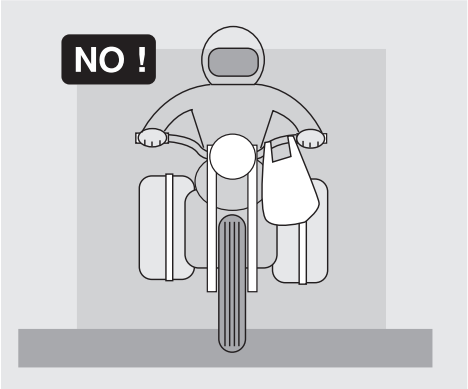

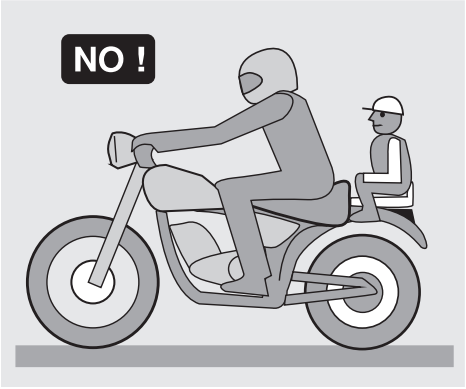

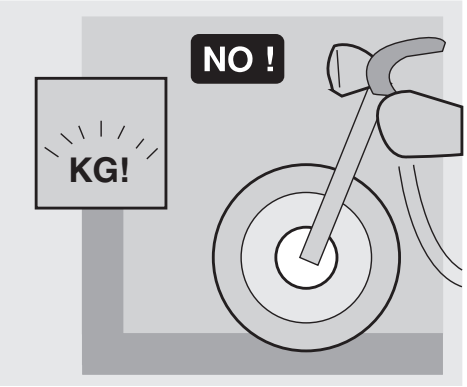

handlebars, fenders, or forks, because this will upset the handling of your vehicle, and could prevent you from avoiding an accident. Failure to heed this warning can lead to an upset with subsequent serious injury or even death.

Do not ride with your crash helmet hung from the strap because it could easily foul the wheels, fenders, or forks, causing an upset and subsequent serious injury or even death.

Carry a passenger only if your vehicle is equipped with passenger footrests, handgrips for the passenger to hold on to, and a passenger saddle.

When carrying a passenger, remember that your vehicle's handling is degraded, that the brakes are less efficient, and the center of gravity is higher and further to the rear.

This makes it more likely that the front wheel will come up off the ground, especially on acceleration. Therefore, you should avoid hard acceleration and hard braking. Many accidents are caused by inexperienced riders carrying passengers. Remember that allowance must be made for the extra weight of the passenger for all driving maneuvers.

Avoid abrupt and excessive acceleration. Always slow down in time and calculate longer stopping and manoeuvring distances. Non-compliance with these instructions may lead to the overturning of the vehicle or to other accidents with consequent serious injuries or even death.

Never carry loosely packaged items, make sure that everything that you carry on your vehicle is carefully secured.

Do not carry packages which protrude from the luggage rack or which cover any of the signal lights, the headlight, or the horn.

Never carry animals or children on the glove compartment or on the luggage rack.

Never exceed the labeled maximum load for each saddlebag.

Overloading your vehicle seriously reduces its stability and maneuverability and can lead to an upset with subsequent serious injury or death.

Downloaded from www.Manualslib.com manuals search engine

LOCATION OF KEY COMPONENTS

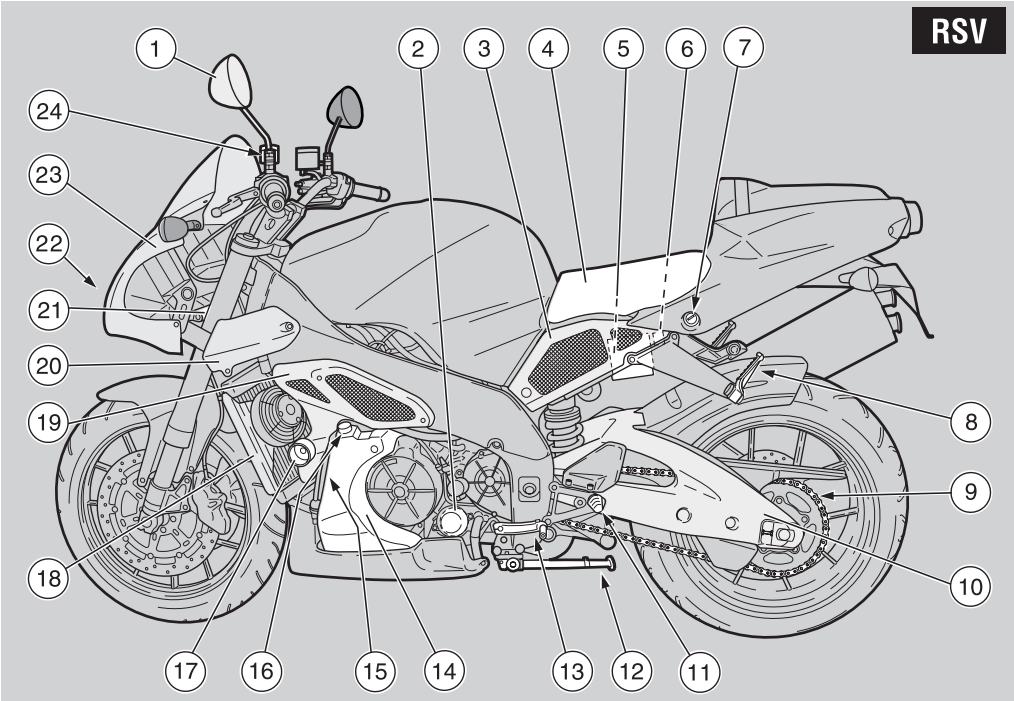

KEY

1) Left rear-view mirror
2) Engine oil filter
3) Left side body panel
4) Rider seat
5) Battery
6) Main fuse carrier (30 A)
7) Passenger seat lock
8) Passenger left footpeg (snaps closed/open)
9) Drive chain
10) Rear swinging arm
11) Rider left footpeg
12) Side stand
13) Gear shift lever
14) Engine oil tank
15) Engine oil level
16) Engine oil tank cap
17) Nylon protection
18) Left radiator guard
19) Left side fairing
20) Left air conveyor
21) Non-adjustable steering damper (adjustable steering damper R g)
22) Headlamp
23) Front fairing
24) Clutch fluid reservoir

Downloaded from www.Manualslib.com manuals search engine

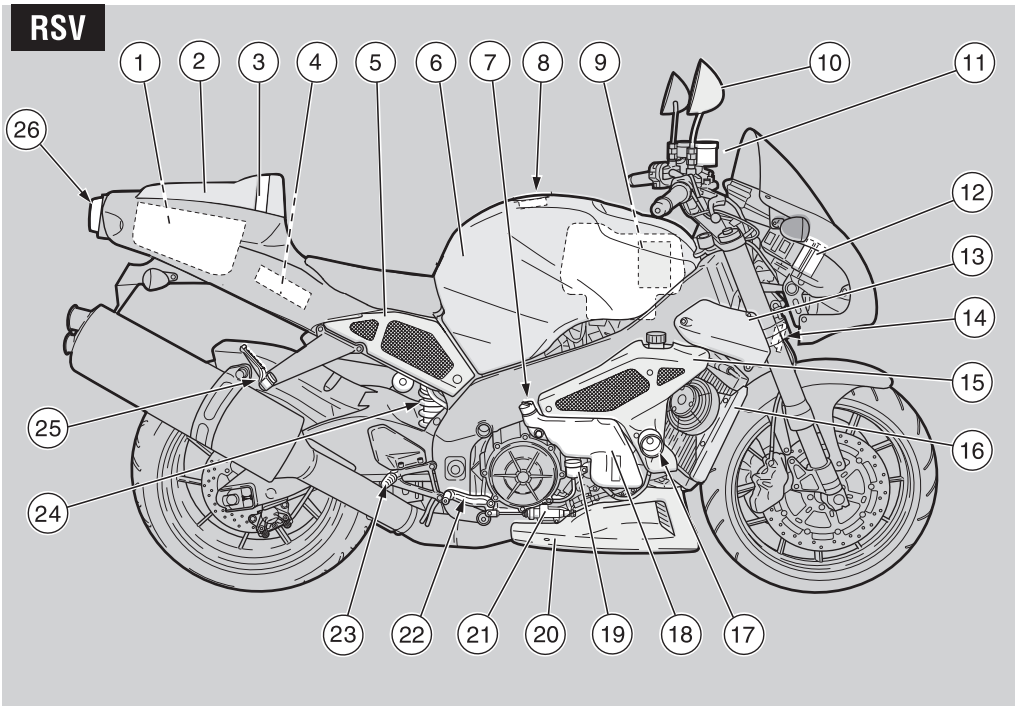

KEY

1) Glove/tool kit compartment
2) Passenger seat
3) Passenger grab strap
4) Electronic control unit
5) Right side body panel
6) Fuel tank
7) Coolant expansion reservoir cap
8) Fuel tank filler cap
9) Air cleaner
10) Right rear-view mirror
11) Front brake fluid reservoir
12) Secondary fuse carrier (15 A)
13) Right air conveyor
14) Warning horn
15) Right side fairing
16) Right radiator guard
17) Nylon protection
18) Expansion reservoir
19) Rear brake fluid reservoir
20) Lower fairing
21) Rear brake pump
22) Rear brake control lever
23) Rider right footpeg
24) Rear shock absorber
25) Passenger right footpeg (snaps closed/open)
26) Tail light

Downloaded from www.Manualslib.com manuals search engine

LOCATION OF KEY COMPONENTS

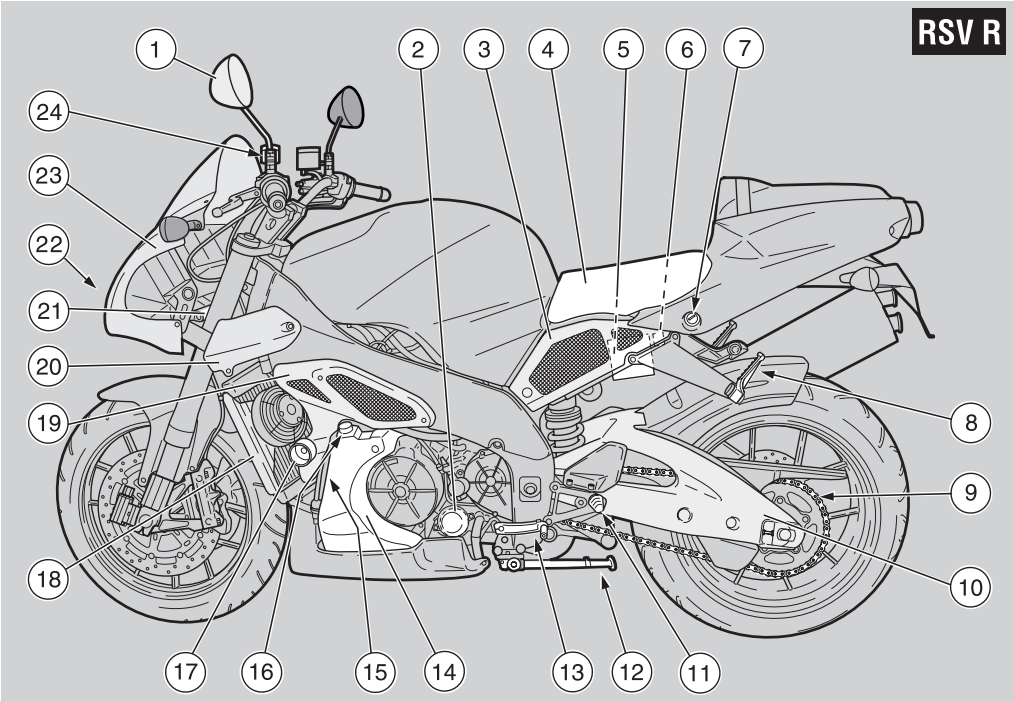

KEY

1) Left rear-view mirror
2) Engine oil filter
3) Left side body panel
4) Rider seat
5) Battery
6) Main fuse carrier (30A)
7) Passenger seat lock
8) Passenger left footpeg (snaps closed/open)
9) Drive chain
10) Rear swinging arm
11) Rider left footpeg
12) Side stand
13) Gear shift lever
14) Engine oil tank
15) Engine oil level
16) Engine oil tank cap
17) Nylon protection
18) Left radiator guard
19) Left side fairing
20) Left air conveyor
21) Adjustable steering damper
22) Headlight
23) Front fairing
24) Clutch fluid reservoir

Downloaded from www.Manualslib.com manuals search engine

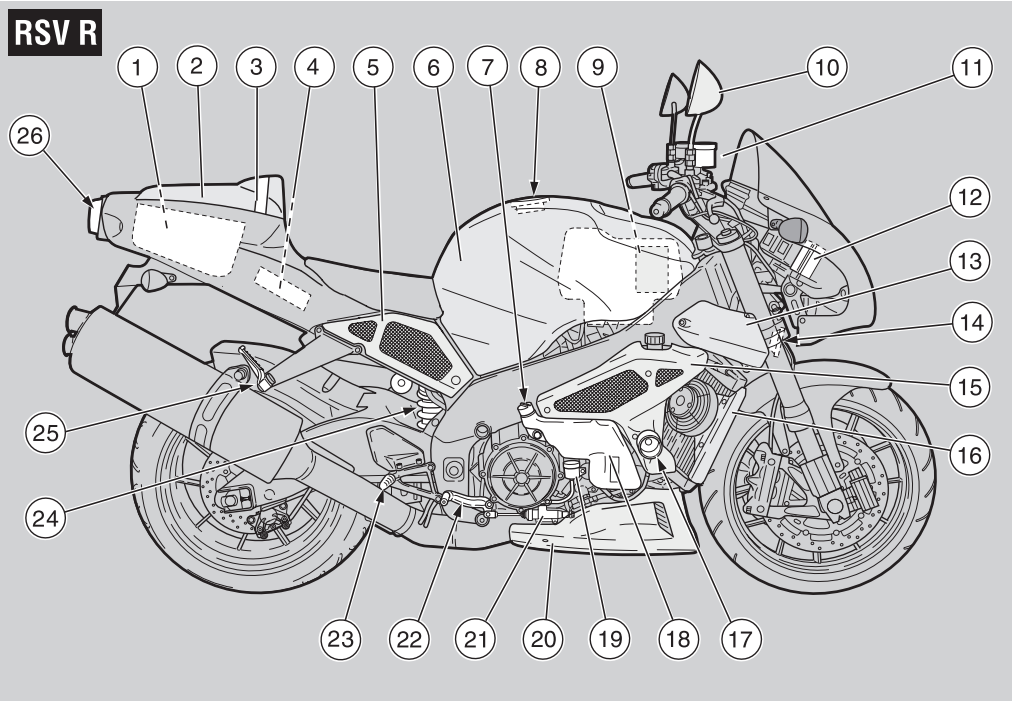

KEY

1) Glove/tool kit compartment
2) Passenger seat
3) Passenger grab strap
4) Electronic control unit
5) Right side body panel
6) Fuel tank
7) Coolant expansion reservoir cap
8) Fuel tank filler cap
9) Air cleaner
10) Right rear-view mirror
11) Front brake fluid reservoir
12) Secondary fuse carrier (15A)
13) Right air conveyor
14) Warning horn
15) Right side fairing
16) Right radiator guard
17) Nylon protection
18) Expansion reservoir
19) Rear brake fluid reservoir
20) Lower fairing
21) Rear brake pump
22) Rear brake control lever
23) Rider right footpeg
24) Rear shock absorber
25) Passenger right footpeg (snaps closed/open)
26) Tail light

Downloaded from www.Manualslib.com manuals search engine

ARRANGEMENT OF THE INSTRUMENTS/CONTROLS

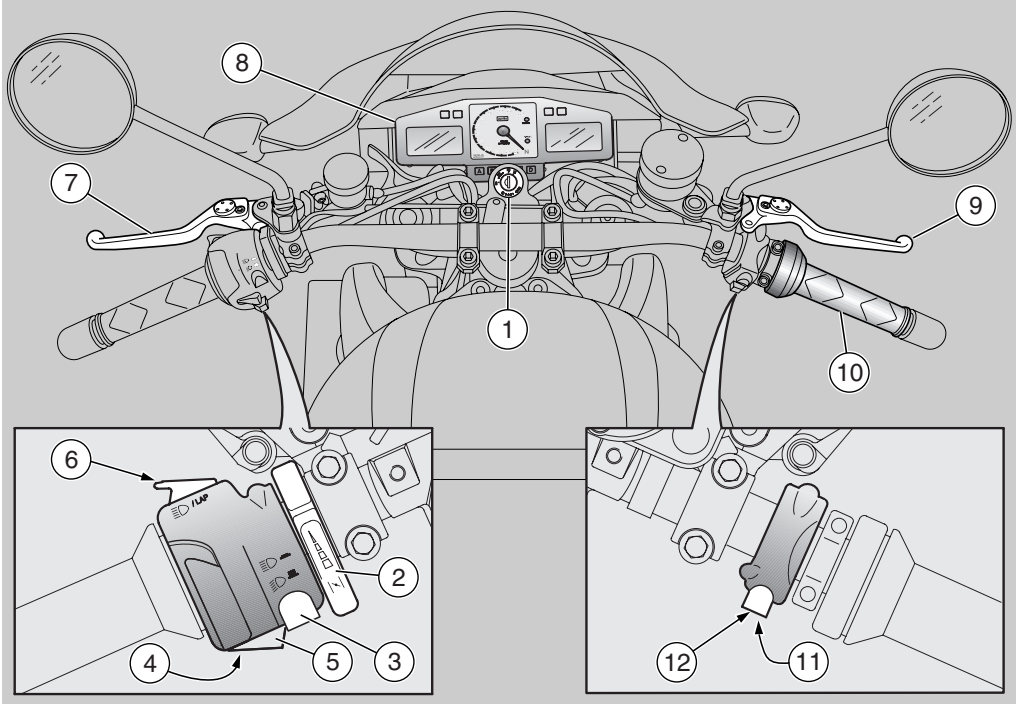

KEY

1) Ignition switch/steering lock (1 - 0 - %)
2) Cold start lever (/)
3) Dimmer switch (7 - 6)
4) Direction indicator switch (5)
5) Horn push button ( ))
6) Passing push button (6)/LAP push button (multifunction)
7) Clutch lever
8) Instruments and indicators
9) Front brake lever
10) Throttle grip
11) Start push button (*)
12) Engine stop switch (" 1 - ! 0)

Downloaded from www.Manualslib.com manuals search engine

INSTRUMENTS AND INDICATORS

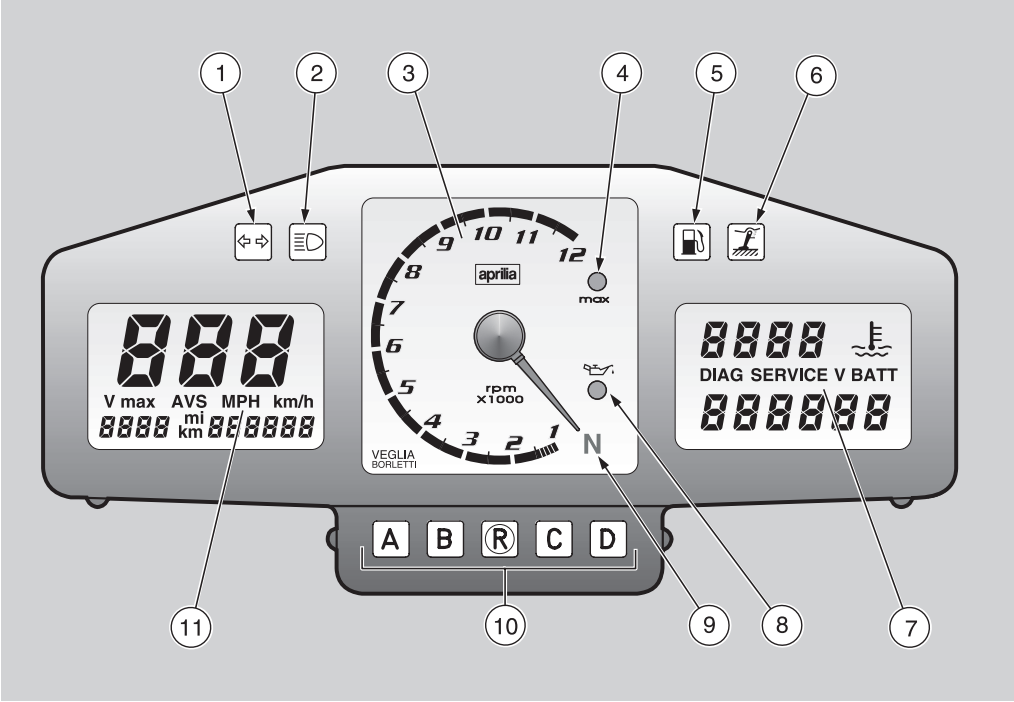

KEY

1) Green direction indicator warning light (5)
2) Blue high beam warning light (6)
3) Revolution counter
4) Red line warning light LED (***max***)
5) Amber low fuel warning light (,)
6) Amber “side stand down” warning light (¦)
7) Right multifunction digital display (coolant temperature - clock - battery voltage - chronometer - diagnostic)
8) Red engine oil pressure warning light LED (-)
9) Green neutral indicator warning light (.)
10) Multifunction computer programming push buttons
11) Left multifunction digital display (speedometer - odometer)

Downloaded from www.Manualslib.com manuals search engine

INSTRUMENTS AND INDICATORS TABLE

Description		Function	
Direction indicator warning light 5		Blinks when the direction indicators are on.	
High beam warning light 6		Comes on when the high beam bulbs are on or when the passing is operated.	
Revolution counter *rpm*		Indicates the number of revolutions of the engine per minute. **⚠ CAUTION** **Never exceed the engine max. speed rate, see p. 80 (RUNNING-IN).**	
Red line warning light LED ***max***		Blinks when the max. rpm set by the user is reached, see p. 42 [SETTING THE RED LINE THRESHOLD (WITH ENGINE OFF ONLY)]. It comes on when the engine max. rpm threshold setting is confirmed, see p. 42 [SETTING THE RED LINE THRESHOLD (WITH ENGINE OFF ONLY)] and whenever the ignition key is rotated to position "1", for about three seconds, see p. 40 (MULTIFUNCTION COMPUTER).	
Low fuel warning light ,		Comes on when the quantity of fuel left in the tank is about 1.057± 0.264 US gal (4.5 ± 1 ℓ). **In this case, top up as soon as possible, see p. 53 (FUEL).**	
Side stand down warning light ¦		Comes on when the side stand is down.	
Engine oil pressure warning light LED -		Comes on whenever the ignition switch is in position "1" and the engine is not running, thus checking the functionality of the LED. If the light LED does not come on in this phase, contact an **aprilia Official Dealer**. **⚠ CAUTION** **If the engine oil pressure warning light LED " - " remains on after the start or comes on during the normal operation of the engine, this means that the engine oil pressure in the circuit is insufficient.** **In this case, stop the engine immediately and contact an aprilia Official Dealer.**	
Neutral indicator warning light .		Comes on when the gear is in neutral.	
Multifunction digital display (left side)	**Speedometer (km/h - MPH)**	Indicates the instantaneous, average or maximum driving speed (in kilometres or miles) according to the presetting, see p. 40 (MULTIFUNCTION COMPUTER).	To alternate the data displayed, see p. 40 (MULTIFUNCTION COMPUTER).
	Odometer (km - mi)	Indicates the partial or total number of kilometers or miles covered.	

Downloaded from www.Manualslib.com manuals search engine

Description		Function	
Multifunction digital display (right side)	**Coolant temperature (°C/°F)** (	Indicates the temperature of the coolant in the engine, see p. 40 (MULTIFUNCTION COMPUTER). **⚠ CAUTION** **Do not leave the ignition switch in position "0", since the cooling fans would stop independently of the coolant temperature; in this case there would be a further temperature increase.** If a temperature of 239 – 248 °F (115 – 120 °C) is displayed, stop the engine, turn the ignition key to position "1" and wait for the disconnection of the cooling fans. At this point turn the ignition key to position "0" and check the coolant level, see p. 63 (COOLANT). If the writing "LLL" is displayed, stop the vehicle and let the engine run at 3000 rpm for approximately two minutes, thus allowing the coolant to circulate regularly in the system; then press the engine stop switch to position " ! 0" and check the coolant level, see p. 63 (COOLANT). If the writing "LLL" is still displayed after the coolant level has been checked, contact an **aprilia Official Dealer**. **⚠ CAUTION** **If the maximum allowed temperature (248 °F - 120°C) is exceeded, the engine may be seriously damaged.**	To alternate the data displayed, see p. 40 (MULTIFUNCTION COMPUTER).
	Clock	Indicates the hour and minutes according to the presetting, see p. 40 (MULTIFUNCTION COMPUTER).	
	Battery voltage V BATT	Indicates the battery voltage, see p. 40 (MULTIFUNCTION COMPUTER).	
	Chronometer	Indicates the various timings according to the presetting, see p. 40 (MULTIFUNCTION COMPUTER).	
	Diagnostics	Whenever the ignition switch is brought to position "1", the writing "EFI" appears on the right side of the multifunction display for approximately three seconds. **⚠ CAUTION** **If the writing "EFI" is displayed during the normal operation of the engine, this means that the electronic control unit has detected an anomaly. In many cases, the engine keeps running with reduced performance levels; immediately contact an aprilia Official Dealer.**	

Downloaded from www.Manualslib.com manuals search engine

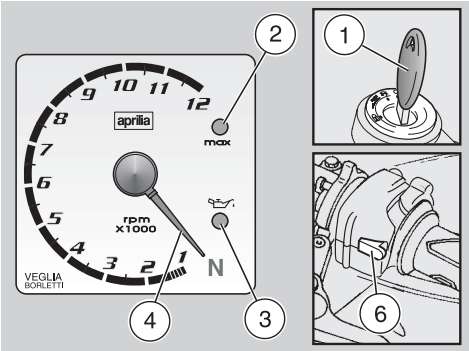

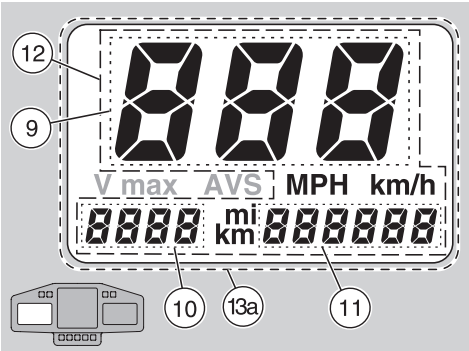

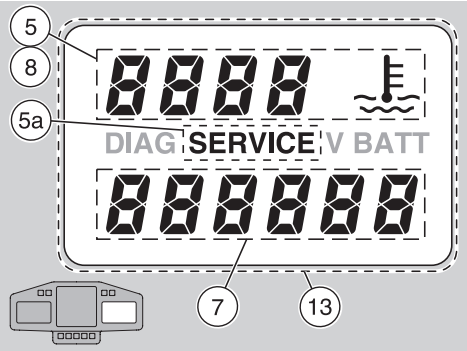

MULTIFUNCTION COMPUTER

When the ignition key (1) is rotated to position "1", the following warning lights come on on the dashboard:

– red line warning light LED "***max***" (2);
– red engine oil pressure warning light LED " - " (3), which remains on until the engine starts.

The pointer (4) of the revolution counter shifts to the maximum value (rpm) set by the user. After about three seconds the red line warning light LED "***max***" (2) goes off; the pointer (4) of the revolution counter returns to its initial position.

The writing "*EFI*" (5) appears on the right side of the multifunction display for three seconds. In this way the component operation is tested.

⚠ CAUTION

After the first 625 mi (1000 km) and successively every 4687 mi (7500 km), the writing "SERVICE" (5a) appears on the right display. In this case contact an aprilia Official Dealer, who will carry out the operations indicated in the regular service intervals chart, see p. 85 (REGULAR SERVICE INTERVALS CHART). To make the writing "SERVICE" disappear, press the "LAP" push button (6) and then the push button l and keep them pressed for about five seconds.

With the ignition key (1) in position "1" the standard settings on the dashboard are the following:

Right display: Clock (7), coolant temperature in °C (8).

Left display: Instantaneous speed in km/h (9), trip 1 (trip odometer) (10), total kilometres/miles odometer (11).

Upon installation of the battery or of the 30A main fuses:

– the revolution counter pointer (4) makes twelve clockwise clicks, thus checking the operation of the revolution counter itself;
– the instantaneous, maximum and average speed function is set in "**km/h**";
– the coolant temperature is set in °C;
– the digital clock is set to zero;
– the red line is set at 6000 rpm, indicated by the coming on of the red line warning light LED "***max***" (red) (2).

NOTE If necessary, carry out the appropriate adjustments.

SEGMENT OPERATION CHECK

◆ Press the push buttons f and e at the same time.
◆ Rotate the ignition key (1) from position "0" to position "1".

All the segments (13) (13a) will remain on until the push buttons f and e are released.

SWITCHING FROM km TO mi (from km/h to MPH) AND VICEVERSA (LEFT DISPLAY)

◆ Press the push button f until, after about five seconds, all the writings (12) on the left display start blinking.
◆ Release the push button f.

Downloaded from www.Manualslib.com manuals search engine

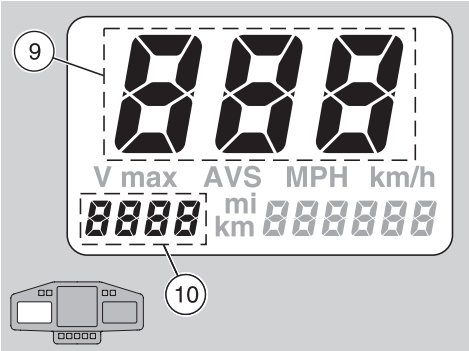

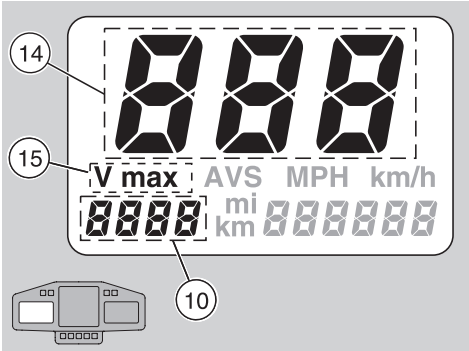

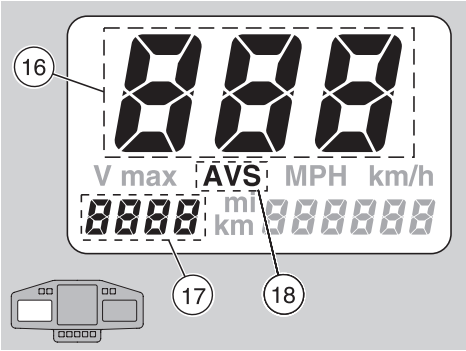

◆ Press the push button e to change the unit of measurement from "**km**" to "**mi**" (from "**km/h**" to "**MPH**") or viceversa.
◆ To confirm the setting, press the push button f for about five seconds.

SETTING THE INSTANTANEOUS, MAXIMUM AND AVERAGE SPEED (LEFT DISPLAY)

NOTE Two seconds after the vehicle has started moving, the instantaneous speed is automatically shown on the display, even if a different function is set.

When the ignition key is rotated to position "1", the instantaneous speed (9) and the partial number of kilometres/miles covered "trip 1" (10) appear on the display.

Resetting "trip 1" (10): with the odometer set on the instantaneous speed function, press the push button l for about two seconds.

◆ To display the maximum speed (14) and the distance "trip 1" (10), press the push button e for about one second. The writing "**V max**" (15), the maximum speed (14) and the distance "trip 1" (10) are displayed.

Resetting the maximum speed (14): with the odometer set on the "**V max**" function, press the push button l for about 2 seconds.

NOTE The measurement of the maximum speed is relevant to the distance covered from the last setting to zero of the maximum speed itself. The distance "trip 1" (10) shown on the display indicates the number of kilometres/miles covered from the last setting to zero, to the distance "trip 1".

◆ To display the average speed (16) and the distance "trip 2" (17), press the push button e again for about 1 second.

The writing "**AVS**" (18), the average speed (16) and the distance "trip 2" (17) are displayed.

Resetting the average speed (16) and the distance "trip 2" (17): with the odometer set on the "**AVS**" function, press the push button l for about 1 second.

NOTE The measurement of the average speed is relevant to the distance "trip 2" (odometer).

The distance "trip 2" (17) shown on the display indicates the number of kilometres/miles covered from the last setting to zero.

If more than 625 mi (1000 km) are covered without setting "trip 2" to zero, the value of the average speed will be wrong.

◆ To display the instantaneous speed (13) and the distance "trip 1" (10), press the push button e again.

Downloaded from www.Manualslib.com manuals search engine

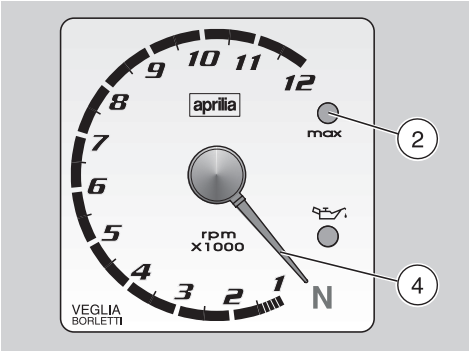

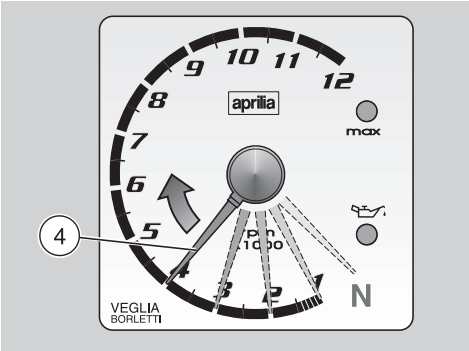

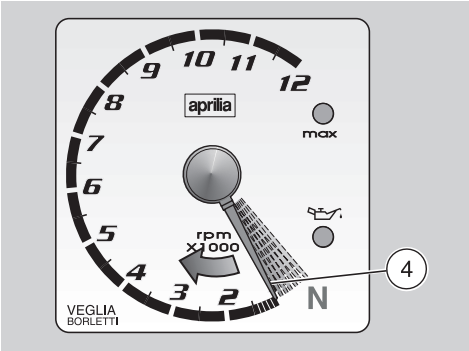

SETTING THE RED LINE THRESHOLD (WITH ENGINE OFF ONLY)

When the maximum rpm set is exceeded, the red line warning light LED "*max*" (2) positioned on the dashboard starts blinking.

If the push button d is pressed for less than one second, the pointer of the revolution counter (4) shifts to the red line value set for three seconds, after which it returns to its initial position.

For the adjustment, proceed as follows:

- Press the push button d, release it and press it d again within 3 seconds. The pointer (4) moves increasing the value by 1000 rpm at each click, as long as d is kept pressed; when it has reached the maximum value, it starts again from the beginning.
- Press the push button d until the desired rpm value has been set.
- If the push button d is released and then pressed again within 3 seconds, intermittently, the pointer (4) moves increasing the value by 100 rpm at each click; when it has reached the maximum value, it starts again from the beginning.

NOTE It is not possible to set the red line at values lower than 2000 rpm or higher than 12000 rpm.

⚠ CAUTION

Never exceed the recommended rpm, see p. 80 (RUNNING-IN).

- To confirm, release the push button d. After three seconds, the red line threshold setting is stored.

NOTE The setting is confirmed by the coming on of the red line warning light LED "***max***" (2).

Downloaded from www.Manualslib.com manuals search engine

MULTIFUNCTION (RIGHT DISPLAY)

The right display (multifunction) includes the coolant temperature in °F (°C) (8) and the digital clock (7) as standard settings.

NOTE When the engine is cold, the writing " 8 " blinks.

By pressing the push button a, the following functions can be obtained in sequence:

Standard setting: Temperature in °C and digital clock

a

Battery voltage (V BATT)

a

Setting the hour

a

Setting the minutes

a

Setting °C or °F

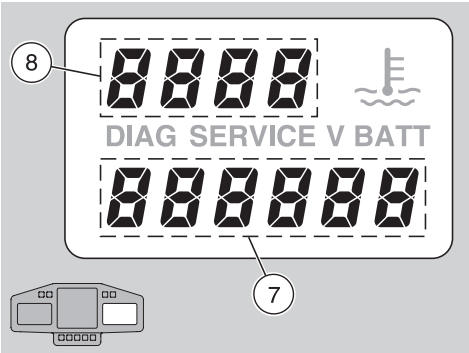

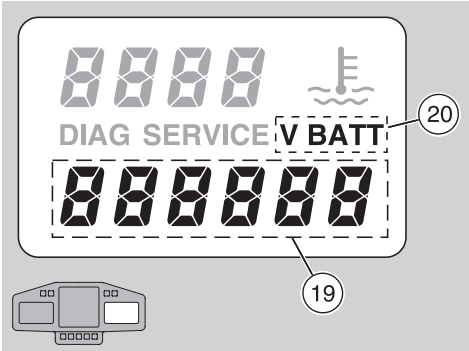

STANDARD SETTING: COOLANT TEMPERATURE AND DIGITAL CLOCK

The coolant temperature value (8) is shown in the upper part of the right display. It is possible to switch from °F to °C and viceversa, see p. 44 (SETTING °F OR °C).

– When the temperature is below 95°F (35°C), the writing " 8 " (8) blinks on the right display.
– When the temperature is over 239°F (115°C), the value (8) blinks on the right display, even if a function different from the standard setting has been set.
– When the temperature is over 266°F (130°C), the writing "LLL" (8) appears on the right display.

⚠ CAUTION

If the writing "LLL" is displayed with a temperature below 266°F (130°C), there may be a failure of the electric circuit. In this case, contact an aprilia Official Dealer.

Thermometer range on the display: 95–266 °F (35–130°C).

The digital clock (7) appears in the lower part of the right display. To set or modify hour and minutes, see p. 44 (SETTING THE HOUR) and (SETTING THE MINUTES).

BATTERY VOLTAGE - VBATT

◆ If the push button a is pressed once, the battery voltage expressed in volt (19) appears in the lower part of the right display, while the coolant temperature (8) is displayed in the upper part. The writing "**V BATT**" (20) is displayed. The recharge circuit functions correctly if at 4000 rpm the battery voltage with low beam on is included between 13 and 15 V.

Downloaded from www.Manualslib.com manuals search engine

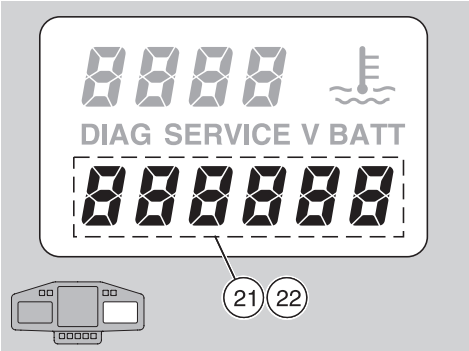

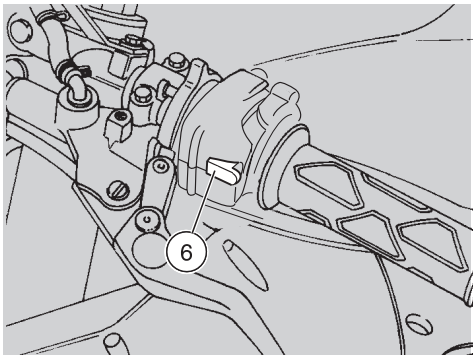

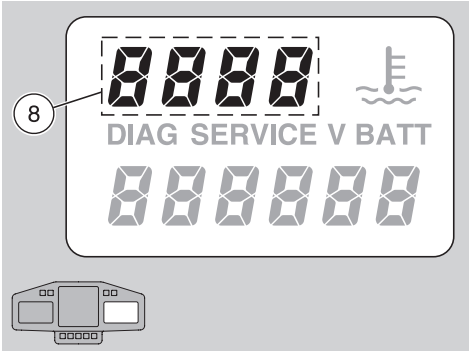

SETTING THE HOUR

- When the push button a is pressed for the second time, the hour segments (21) start blinking in the lower part of the right display (digital clock).
- To modify the hour setting, press the “LAP” push button (6) on the left part of the handlebar.
- To confirm the hour setting, press the push button a .

SETTING THE MINUTES

- When the push button a is pressed for the third time, the minute segments (22) start blinking in the lower part of the right display (digital clock).
- To modify the minute setting, press the “LAP” push button (6) on the left part of the handlebar.
- To confirm the minute setting, press the push button a .

SETTING °F OR °C

- When the push button a is pressed for the fourth time, the segments of the coolant temperature in °F or °C (8) start blinking in the upper part of the display.
- To modify from °F to °C setting, or vice versa, press the “LAP” push button (6) on the left part of the handlebar.
- To confirm the setting, press the push button a .

Downloaded from www.Manualslib.com manuals search engine

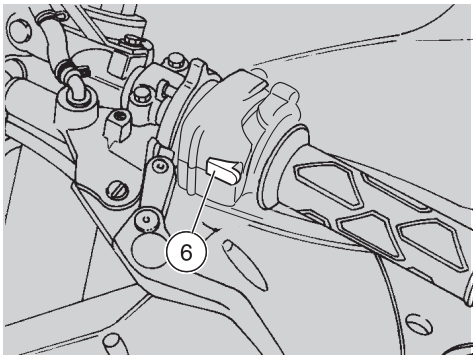

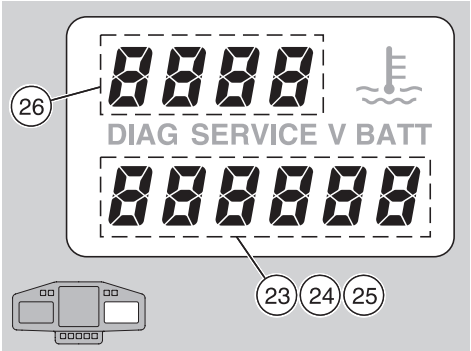

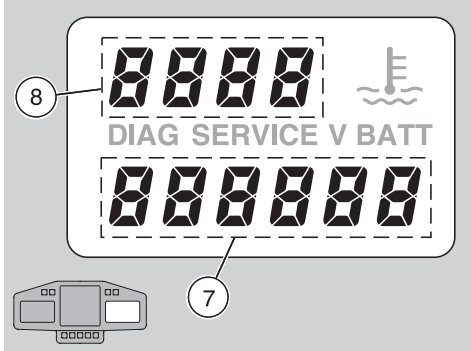

CHRONOMETER (RIGHT DISPLAY)

The chronometer makes it possible to measure the time per lap with the vehicle on a racetrack and to store the data, in such a way as to be able to consult them successively.

When the “CHRONOMETER” function has been selected, it is not possible to recall the following functions:

– maximum speed “**V max**”;
– average speed “**AVS**”;
– distance “trip 2”.

◆ To operate the chronometer, press the “LAP” push button (6) and, within seven seconds, the push button a .
◆ To start timing, press the “LAP” push button (6) and release it immediately.
◆ To store the time acquired, press the “LAP” push button (6).

The “LAP” push button (6) is not enabled for 10 seconds and the last time stored (23) is shown on the display.

After which, the chronometer with the current timing (24) is displayed, starting from ten seconds.

◆ To display the first time stored (25), press the push button e .
◆ To be able to see the stored times in sequence, press the “LAP” push button (6). The writings L1, L2, L3, L4, etc. (26) are displayed.
◆ To start timing again, press the push button e .

NOTE It is possible to store max. 40 times, after which the “LAP” push button (6) is not effective any longer.

◆ To set the memory to zero, press the push button f and the “LAP” push button (6) at the same time for two seconds.

◆ To leave the chronometer function, press the “LAP” push button (6) and the push button a .

The coolant temperature (8) and the digital clock (7) appear on the right display (multifunction).

NOTE When the engine is cold, the writing " 8 " blinks.

DIAGNOSTICS

Whenever the ignition switch is turned to position “1”, the writing “EFI” is displayed for about three seconds.

⚠ CAUTION

If the writing “EFI” is displayed during the normal operation of the engine, this means that the electronic unit has detected an anomaly. In many cases, the engine keeps running with reduced performance levels; immediately contact an aprilia Official Dealer.

Downloaded from www.Manualslib.com manuals search engine

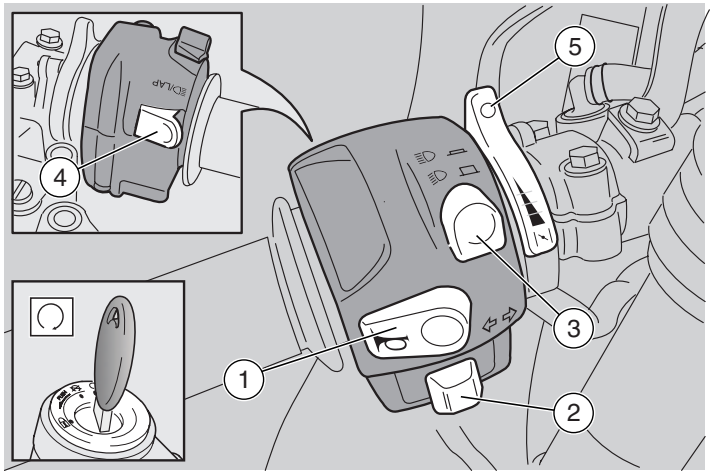

CONTROLS ON LEFT HANDLEBAR

NOTE The electrical parts work only when the ignition switch is in position "1".

1) HORN PUSH BUTTON ( ))

The horn is activated when the push button is pressed.

2) DIRECTION INDICATOR SWITCH (5)

To indicate the turn to the left, move the switch to the left; to indicate the turn to the right, move the switch to the right.

To turn off the direction indicator, press the switch.

3) DIMMER SWITCH ($ - #) _

When it is in position " $ " the parking lights, the dashboard light and the low beam are always on.

When it is in position " # ", the high beam comes on.

4) PASSING PUSH BUTTON (6)/LAP PUSH BUTTON (multifunction)

NOTE For the setting of the functions, see p. 40 (MULTIFUNCTION COMPUTER).

This push button makes it possible to use the passing button in case of danger or emergency, or displays the various preset functions on the right multifunction display:

– hour and minutes;
– coolant temperature (°F or °C);
– chronometer.

The passing is operated by pressing the push button, independently of the position of the light switch (' - & - •).

NOTE To disconnect the passing, release the push button.

5) COLD START LEVER (/)

The starter for the cold start of the engine is operated by rotating the lever " / " downwards.
To disconnect the starter, move the lever " / " to its initial position.

Downloaded from www.Manualslib.com manuals search engine

CONTROLS AT THE RIGHT HAND GRIP

6) ENGINE STOP SWITCH (" 1 – ! 0)

Use the engine stop switch to stop the engine only in case of emergency. It is essential that you be very familiar with this control so that you will automatically stop the engine in the event of a stuck throttle or other engine runaway.

⚠ WARNING

If the throttle sticks open, it may cause a collision with another vehicle, or an upset.
If the throttle sticks, kill the engine with the engine stop switch located on the right handlebar.
Do not attempt to restart the engine until the throttle has been repaired and works perfectly. Failure to obey this warning can lead to a runaway with seriously injuries or even death.

Your vehicle is equipped with a double cable throttle. One cable opens the throttle when you rotate the throttle grip toward you; the other closes the throttle when you rotate the grip away from you. It is essential, when you release the throttle grip, that it automatically return to the idle position.
This double cable arrangement enhances safety by providing for positive closing of the throttle.

⚠ WARNING

In the event of a throttle sticking emergency, always kill the engine using the engine stop switch located near the throttle grip on the right handlebar. Never use your vehicle if the throttle does not automatically fully return to the idle position when the throttle grip is released. Contact your local aprilia Dealer for repairs. Failure to heed this warning can lead to a serious accident and subsequent injury or even death.

⚠ WARNING

Do not use the engine stop switch to stop the engine while the vehicle is moving.

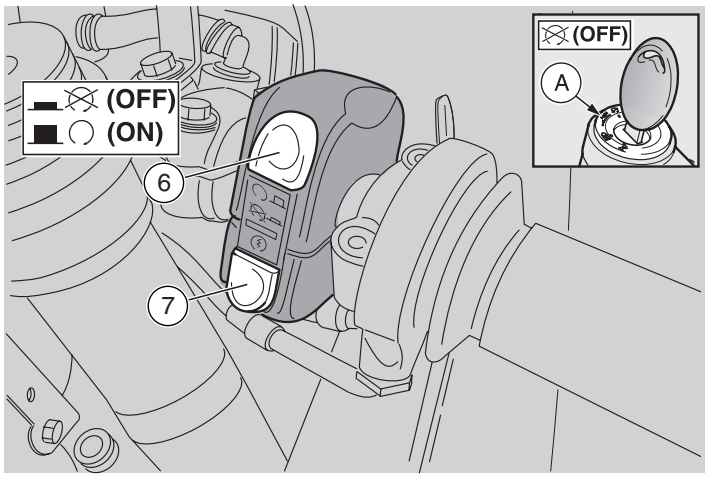

With the switch (1) in the " " (" (ON) position it is possible to start the engine. The engine can be stopped by moving the switch (1) to the " ! + " (OFF) position.

⚠ CAUTION

To stop the vehicle, exclusively use the ignition switch (A).
Leave the engine stop switch (1) in position " 1 " (ON) and use it only in case of emergency.
Do not leave the ignition on if you have stopped for emergency the engine by moving the engine stop switch to the " ! + " (OFF) position as this will discharge the battery.
When, for emergency, the vehicle has come to rest after stopping the engine with the engine stop switch, turn the ignition switch (A) to the " ! + " (OFF) position.

7) STARTER SWITCH (/)

When the starter switch is pressed, the starter engages and the engine will start. For starting, see p. 74 (STARTING).

Downloaded from www.Manualslib.com manuals search engine

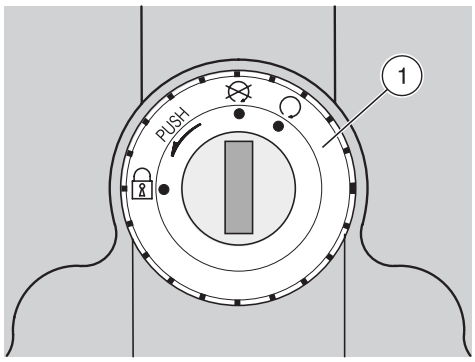

IGNITION SWITCH

The ignition switch (1) is positioned on the upper plate of the steering column.

NOTE The key operates the ignition switch/steering lock, the fuel tank lock and the glove/tool kit compartment lock.

Two keys are supplied together with the vehicle (one spare key).

NOTE Do not keep the spare key on the vehicle.

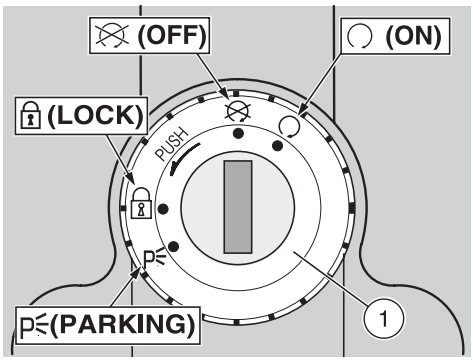

STEERING LOCK

⚠ WARNING

Never turn the key to position "%" in running conditions, in order to avoid losing control of the vehicle.

OPERATION

To lock the steering:

- Turn the handlebar completely leftwards.
- Turn the key to position " 0 ".
- Press the key and rotate it to position "%".
- Extract the key

IGNITION SWITCH POSITIONS

Position	Function	Key removal
H (LOCK) Steering lock	The steering is locked. It is neither possible to start the engine, nor to switch on the lights.	It is possible to remove the key.
+ (OFF)	Neither the engine, nor the lights can be switched on.	It is possible to remove the key.
((ON)	The engine and the lights can be switched on.	It is not possible to remove the key.
© (PARKING)	The parking lights are illuminated.	It is possible to remove the key.

Downloaded from www.Manualslib.com manuals search engine

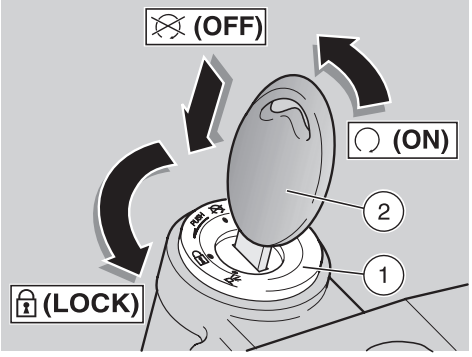

STEERING LOCK

⚠ WARNING

Never attempt to place the ignition switch in the locked "H" (LOCK) position while the vehicle is moving. This will cause loss of control of the vehicle with possible subsequent accident, serious injury or even death.

OPERATION

To lock the steering:

- Place the vehicle on the stand, see p. 82 (POSITIONING THE VEHICLE ON THE STAND).
- Turn the handlebar completely counterclockwise (leftwards).
- Turn the key (2) to position "+" (OFF).
- Release the key (2).

NOTE Turn the key (2) and steer the handlebar at the same time.

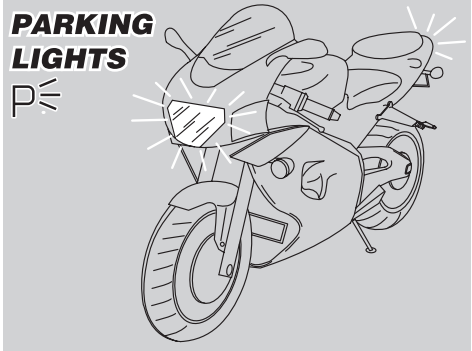

- Press the key (2) and turn it counterclockwise (leftwards), steer the handlebar slowly until the key (2) reaches position "H" (LOCK).
- Remove the key (2).

PARKING LIGHTS

When you have to park your vehicle in a dark or badly lighted area (parking lot or street), it is sometimes useful to leave the parking lights on so that your vehicle will be easily visible.

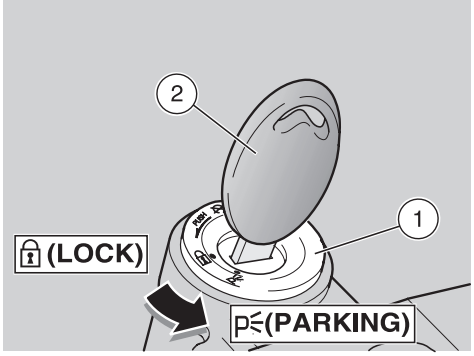

OPERATION

To leave the parking lights on:

- Lock the steering, see beside (STEERING LOCK) without extracting the key (2).
- Turn the key (2) to position "C" (PARKING); the parking lights automatically illuminate.
- Remove the key (2).

⚠ CAUTION

Do not leave the ignition switch (1) in the "C" (PARKING) position for extended periods of time, as this will cause the battery to become completely run down.

Downloaded from www.Manualslib.com manuals search engine

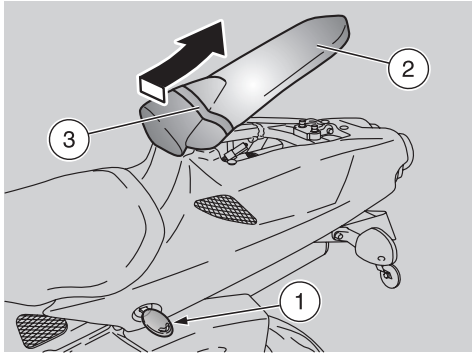

UNLOCKING/LOCKING THE PASSENGER SEAT

- Position the vehicle on the stand, see p. 82 (POSITIONING THE VEHICLE ON THE STAND).
- Introduce the key (1) in the seat lock.
- Rotate the key (1) anticlockwise, lift and withdraw the seat (2) from behind.

NOTE Before lowering and locking the seat (2), make sure that you have not left the key in the glove/tool kit compartment.

To lock the seat (2), proceed as follows:

- Introduce its front part under the passenger grab strap (3).
- Position the seat and press it, making the lock snap.

⚠ WARNING

Before leaving, make sure that the seat (2) is properly locked.

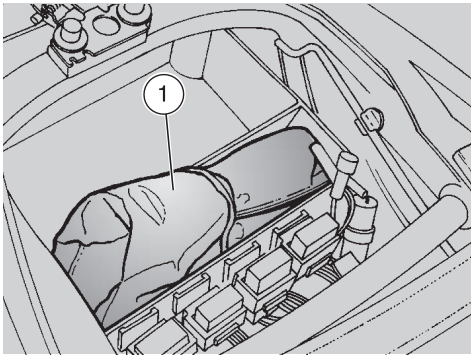

GLOVE/TOOL KIT COMPARTMENT

To reach the glove/tool kit compartment, proceed as follows:

- Remove the passenger seat.

Downloaded from www.Manualslib.com manuals search engine

The tool kit (1) includes:

– 3, 4, 5, 6 mm bent hexagon spanners (2);
– 8 – 10 mm double fork spanner (3);
– 11 – 13 mm double fork spanner (4);
– 22 mm simple box spanner (5);
– 32 mm simple box spanner (6);
– extension for simple box spanners (7);
– 6 – 7 mm double socket spanner (8);
– 8 – 10 mm double socket spanner (9);
– 16 mm socket spanner for spark plug (10);
– double-ended, cross-/cut-headed screwdriver (11);
– tool case (12).

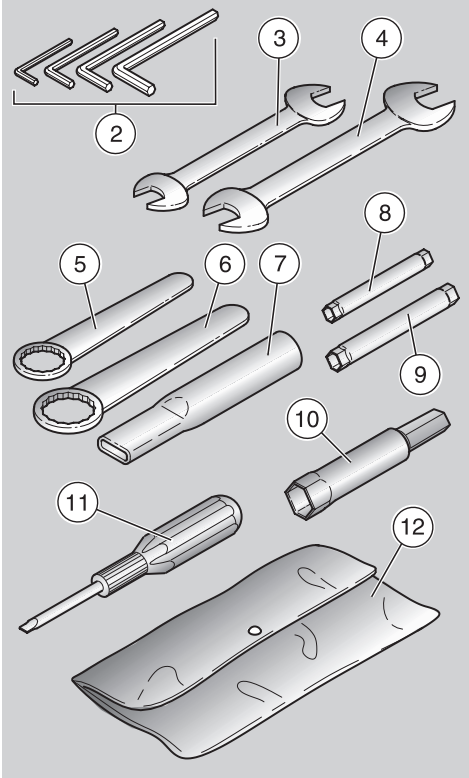

Maximum allowed weight: 3.31 lb (1.5 kg).

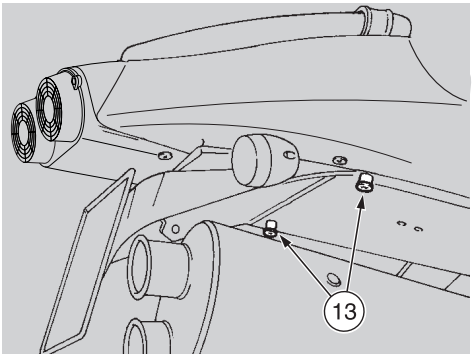

LUGGAGE RACK FASTENINGS

Small luggage can be anchored to the passenger seat, by means of elastic bands that must be fixed to the two fastenings (13).

Maximum allowed weight: 20 lb (9kg).

⚠ WARNING

The luggage must have reduced dimensions and must be anchored securely.

Downloaded from www.Manualslib.com manuals search engine

SPECIAL TOOLS g

To perform some specific operations, it is advisable to use the following special tools (to be requested to an **aprilia Official Dealer**):

Tool	Operations
Pins (1) for the rear service stand, see p. 96 (ASSEMBLING THE PINS FOR THE REAR SERVICE STAND g)	To position the vehicle on the rear service stand.
Rear service stand (2), see p. 96 (ASSEMBLING THE PINS FOR THE REAR SERVICE STAND g).	Engine oil and engine oil filter change. Rear wheel disassembly. Drive chain adjustment. Removal of the lower fairing.
Front service stand (3), see p. 96 (ASSEMBLING THE PINS FOR THE REAR SERVICE STAND g).	Front wheel disassembly.
Click clamp (4) installation pliers, see p. 91 (CLICK CLAMPS).	Click clamp installation.

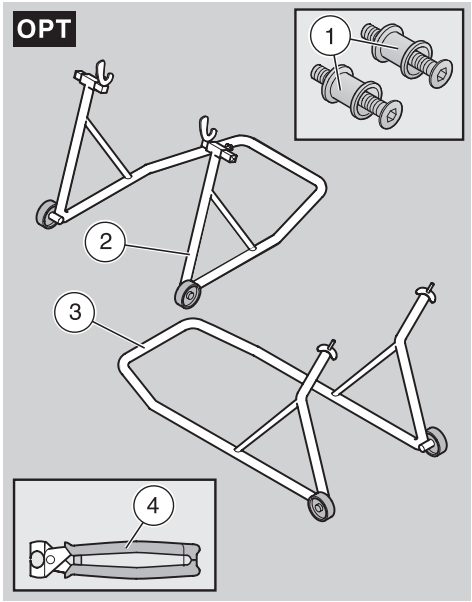

ACCESSORIES

The following accessories:

– "R" front fork,
– "R" rear shock absorber,
– Non-adjustable steering damper on version RSV mille TUONO, adjustable steering damper on version RSV mille R TUONO,

supplied as standard equipment with the RSV mille R, can also be installed on the RSV mille (contact an **aprilia Official Dealer**).

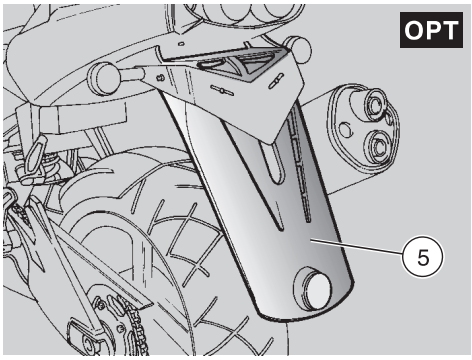

NUMBER PLATE-HOLDER EXTENSION g

The number plate-holder extension (5) can be used when the road surface is wet, in fact it reduces the reach of the water spray caused by the rear wheel.

NOTE The number plate-holder extension (5) is supplied as standard component in the countries where this is required for the homologation.

Downloaded from www.Manualslib.com manuals search engine

FUEL

⚠ WARNING

Gasoline is extremely flammable and in some conditions can become explosive.
Therefore, it is necessary to refuel and carry out maintenance operations involving the fuel system in a well-ventilated area with the engine off.
Do not refuel or do any maintenance on the fuel system with the engine running.
Do not smoke while refueling or near fuel vapors.
Never allow any portion of the fuel system to come in contact with open flames, sparks or other heat sources.
Be careful to avoid spilling fuel when you are refueling. Spilled fuel could ignite when it contacts hot engine or exhaust system surfaces. If you accidentally spill some fuel, make sure that it is wiped up or completely evaporated before starting the vehicle.
Since gasoline expands in the fuel tank when the vehicle is sitting in the open sun, never fill the tank completely to the brim. Leave at least one inch of expansion space.
Avoid any contact of the fuel with your skin, and avoid inhalation of fuel vapors. Do not ever attempt to siphon fuel from one container to another using your mouth as suction for a siphon hose.

⚠ WARNING

Gasoline is poisonous and carcinogenic and contains chemical substances that cause birth defects and other reproductive problems. If gasoline should be accidentally spilled on the skin or clothes, immediately wash it off with soap and water and change clothes.

Should you accidentally spill gasoline in your eyes, flush with a large quantity of water and immediately contact a health professional. Should you accidentally get gasoline into your mouth, do not induce vomiting. Drink a large quantity of milk or clear water and immediately contact a health professional.

Never try to siphon gasoline by sucking it with your mouth. Use a manual pump or a similar system.

If your vehicle overturns, it will leak gasoline which is extremely flammable. Flames or sparks may ignite. This will not only destroy the vehicle but also could do serious property damage to surrounding property and cause serious injuries or even death.

ALWAYS KEEP GASOLINE AWAY FROM CHILDREN.

DISPOSE OF UNWANTED GASOLINE PROPERLY, DO NOT DUMP IT INTO STORM SEWERS OR INTO A SINK OR TOILET.

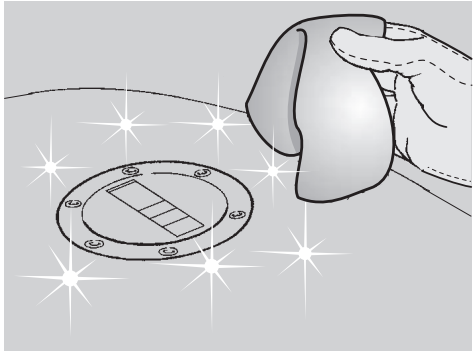

Use only unleaded petrol minimum octane rating (M+R)/2 method 90.

FUEL TANK CAPACITY
(reserve included): 4.75 US gal (18 ℓ).

TANK RESERVE: 1.19 ± 0.26 US gal (4.5 ± 1 ℓ).

REFUEL

To refuel, proceed as follows:

◆ Place the vehicle on the stand, see p. 82 (POSITIONING THE VEHICLE ON THE STAND).

⚠ WARNING

If dirt has accumulated on or around the fuel filler cap, wipe the cap and the area around the cap with a clean cloth. Prevent any foreign material from getting into the fuel tank, this could lead to serious engine damage.

Downloaded from www.Manualslib.com manuals search engine

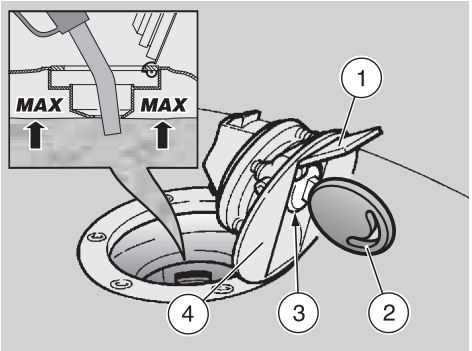

◆ Lift the little cover (1).
◆ Insert the key (2) in the cap lock (3).
◆ Turn the key (2) clockwise, pull it and open the fuel filler cap (4).

⚠ CAUTION

If you use any container or funnel for refueling, make sure that it is perfectly clean.
Any foreign matter getting into the fuel tank may lead to severe damage.

⚠ WARNING

Do not add any additives or other substances to the gasoline.

⚠ WARNING

Do not fill the tank completely. The fuel should never be higher than the bottom of the rim of the filler neck.

◆ Refuel.
When you finish the refueling operation:

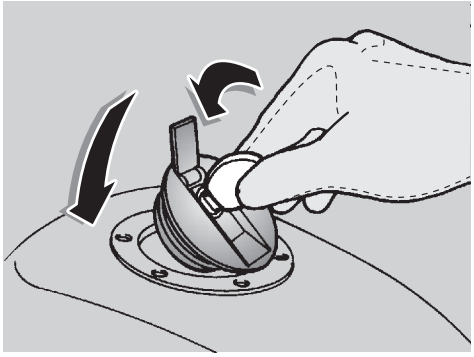

⚠ WARNING

After refueling, replace the fuel filler cap (4) in the correct position.

NOTE The fuel filler cap cannot be closed without the key.

◆ With the key (2) inserted in the lock (3) close the fuel filler cap (4) rotate counterclockwise the key and push it.
◆ Release the key (2), at this point the fuel filler cap (4) is closed.

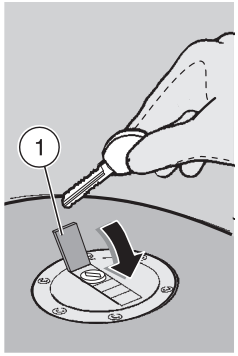

⚠ WARNING

Make sure that the fuel filler cap (4) is properly closed.

◆ Extract the key (2).
◆ Close the little cover (1).

Downloaded from www.Manualslib.com manuals search engine

LUBRICANTS

⚠ WARNING

Proper vehicle lubrication is critical to safe operation. Failure to maintain proper lubricant levels or to use the proper type of clean, new lubricant, can lead to an engine or transmission seizure with subsequent accident, serious injury or death.

⚠ WARNING

Use latex gloves for the maintenance operations that require contact with used oil. Used engine oil may cause skin cancer if repeatedly left in contact with the skin for prolonged periods. Although this is unlikely unless you handle used oil on a daily basis, it is advisable to thoroughly wash your hands with soap and water after handling used oil.

KEEP OIL AWAY FROM CHILDREN.

DISPOSE OF OIL PROPERLY.

⚠ CAUTION

Be very careful when putting oil in your vehicle not to spill oil. Clean up any oil spilled immediately because oil can damage the finish of your vehicle. Also, oil on the tires creates an extremely slippery and therefore dangerous situation.

⚠ CAUTION

In case of oil leakage do not ride your vehicle. Before using the vehicle, have it repaired by your local aprilia Dealer.

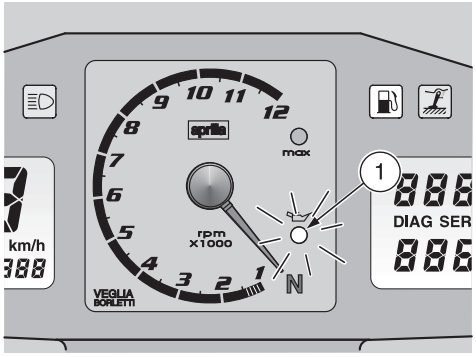

ENGINE OIL

⚠ WARNING

If the engine oil pressure warning light LED "%" (1) remains on after the engine has started, or if it comes on while you are riding your vehicle, this means that the oil system is not developing sufficient pressure. In this case, immediately stop the engine and contact your local aprilia Dealer. Failure to heed this warning can lead to engine seizure, upset, and serious injury or even death.

⚠ CAUTION

Perform these maintenance operations at one-half of the specified intervals, if your vehicle is often used in rainy or very dusty conditions, on unpaved roads, or in any kind of competition.

Check the engine oil level every 300 mi (500 km), see p. 91 (CHECKING THE ENGINE OIL LEVEL AND TOPPING UP).

⚠ CAUTION

Have your local aprilia Dealer change the engine oil after the first 600 mi (1,000 km), and thereafter every 4,650 mi (7,500 km) or every 2,300 mi (3,750 km) if you use your vehicle for competition.

NOTE Use high-quality 15W – 50 oil, see p. 144 (LUBRICANT CHART).

Downloaded from www.Manualslib.com manuals search engine

BRAKES

⚠ WARNING

Do not ride your vehicle with worn or malfunctioning brakes! The brakes are the most important safety system of your vehicle, and using the bike with brakes that are anything less than perfect is very likely to lead to a collision or upset, with consequent risk of serious injury or death.

Check the brake pad wear, as shown on p. 118 (CHECKING THE BRAKE PAD WEAR). Have your brakes serviced by your local aprilia Dealer.

⚠ WARNING

Wet conditions seriously degrade the performance of your brakes. When the road is wet from rain, you should plan to use double the normal stopping distances since both the brakes themselves and the traction of the tires on the road are reduced by the presence of water.
Water on the brakes from washing your vehicle, or splashed up from wet roads, or crossing puddles or ditches, can wet the brakes sufficiently to greatly reduce their effectiveness. Failure to heed these warnings may lead to a serious accident with consequent risk of serious injury or even death.

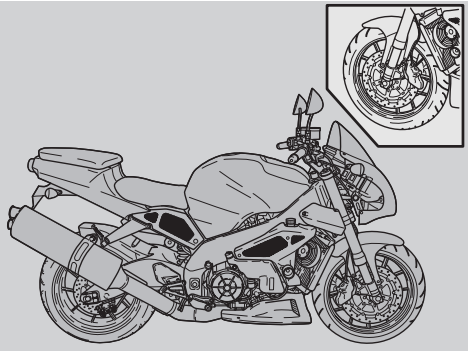

NOTE Your vehicle is equipped with disc brakes and two separate brake systems.
The front brake system is equipped with two discs, one on the right and one on the left side of the front wheel.
The rear brake system is equipped with a single disc on the right side of the rear wheel.

The following information may refer to a single braking system, but is applicable for both braking systems.

⚠ WARNING

The brakes are extremely important for your safety. Do not use the vehicle if the brakes do not work perfectly. Always check the brake efficiency before riding.

⚠ WARNING

If the "feel" or position of the brake lever changes, this may be due to some problem in the hydraulic brake system.

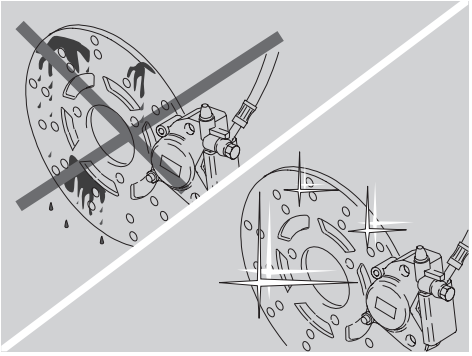

If you have any doubt regarding the perfect functioning of your brake system, or if the normal pre-ride checks indicate any discrepancy, contact your local aprilia Dealer before riding.

⚠ WARNING

Pay special attention to the brake disc and friction material, making sure that they are neither dirty nor oily, especially after maintenance operations or inspections.

Check the brake line, make sure that it is not twisted or kinked, nor leaking.

KEEP BRAKE FLUID AWAY FROM CHILDREN.

DISPOSE OF USED BRAKE FLUID PROPERLY. SEE THE GENERAL WARNINGS AT p. 4 (BRAKE FLUID).

Downloaded from www.Manualslib.com manuals search engine

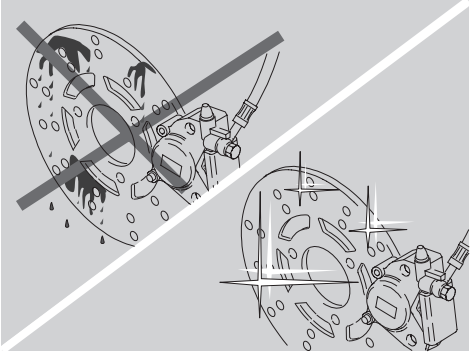

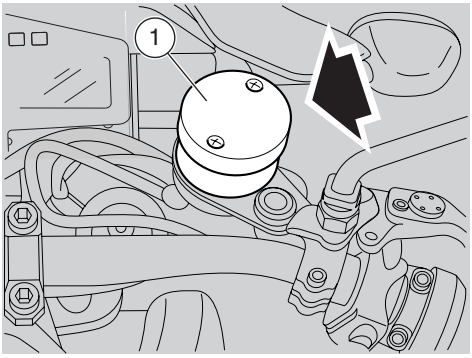

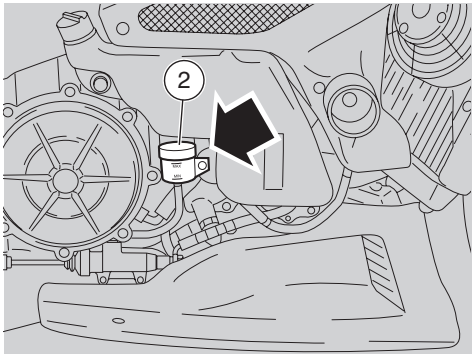

DISC BRAKES

⚠ WARNING

The brakes are the parts that most ensure your safety and for this reason they must always be perfectly working; check them before every trip.

A dirty disc soils the pads, with consequent reduction of the braking efficiency.

Dirty pads must be replaced, while dirty discs must be cleaned with a high-quality degreaser.

The brake fluid must be changed every two years by your local aprilia Dealer.

Use brake fluid of the type specified in the lubricant chart, see p. 144 (LUBRICANT CHART).

NOTE This vehicle is provided with disc brakes with two, front and rear braking systems having separate hydraulic circuits.

The front braking system is with double disc (right and left side).

The rear braking system is with single disc (right side).

The following information refers to a single braking system, but is valid for both.

When the disc pads wear out, the level of the fluid decreases to automatically compensate for their wear.

The front brake fluid reservoir (1) is located on the right handlebar, near the connection of the front brake lever.

The rear brake fluid reservoir (2) is located near the coolant tank at the lower right-hand side of the motorcycle.

NOTE Perform the maintenance operations with half the prescribed frequency if the vehicle is used in rainy or dusty areas, on uneven surfaces or on racetracks.

Have the brake discs checked by your local **aprilia Dealer** after the first 625 mi (1000 km) and successively every 4687 mi (7500 km).

Before departure, check the brake fluid level in the reservoirs, see p. 58 (FRONT BRAKE), p. 59 (REAR BRAKE), and the wear of the pads, see p. 118 (CHECKING THE BRAKE PAD WEAR).

Have the brake fluid changed every two years by your local **aprilia Dealer**.

⚠ WARNING

Do not use the vehicle if the braking system leaks fluid.

Downloaded from www.Manualslib.com manuals search engine

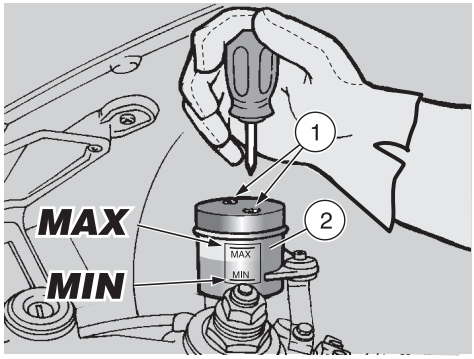

FRONT BRAKE

CHECK

- Position the vehicle on the stand, see p. 82 (POSITIONING THE VEHICLE ON THE STAND).
- Turn the handlebar completely rightwards.
- Make sure that the fluid level exceeds the "**MIN**" mark.

MIN= minimum level
MAX= maximum level

If the fluid does not reach at least the "**MIN**" mark:

⚠ CAUTION

When the disc pads wear out, the level of the fluid decreases progressively to compensate for their wear.

- Check the brake pad wear, see p. 118 (CHECKING THE BRAKE PAD WEAR) and the disc wear.

If the pads and/or the disc do not need replacing, provide for topping up.

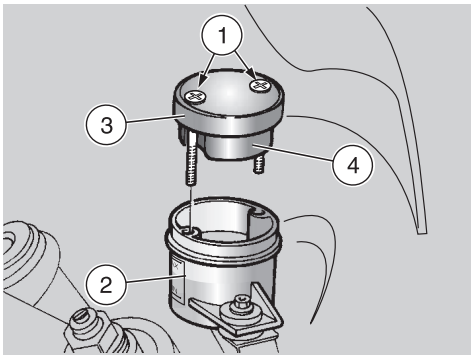

TOPPING UP

Carefully read p. 56 (BRAKES).

⚠ CAUTION

The brake fluid may flow out of the tank. Do not operate the front brake lever if the screws (1) are loose or, most important, if the brake fluid reservoir cover has been removed.

- Unscrew the two screws (1) of the brake reservoir (2) by means of a short, cross-headed screwdriver.

⚠ WARNING

Avoid any prolonged exposure of the brake fluid to the air.

The brake fluid is hygroscopic and when in contact with the air it absorbs its humidity.

Leave the brake fluid tank open ONLY for the time necessary for topping up.

- Raise and remove the cover (3) together with the screws (1) and the gasket (4).

⚠ CAUTION

In order not to spill the brake fluid while topping up, do not shake the vehicle.

Do not put additives or other subtances into the fluid.

If you use a funnel or other similar items, make sure that they are perfectly clean.

- Fill the tank (2) with brake fluid, see p. 144 (LUBRICANT CHART), until reaching the correct level between the "**MIN**" and "**MAX**" marks.

⚠ CAUTION

Do not exceed the "MAX" level while topping up.

It is advisable to top up until reaching the "MAX" level only with new pads.

Do not reach the "MAX" level with worn out pads, since this will cause a fluid outflow when the pads are changed.

Check the braking efficiency.

In case of excessive stroke of the brake lever or reduced efficiency of the braking system, contact your local aprilia Dealer, since it may be necessary to bleed the system.

Downloaded from www.Manualslib.com manuals search engine

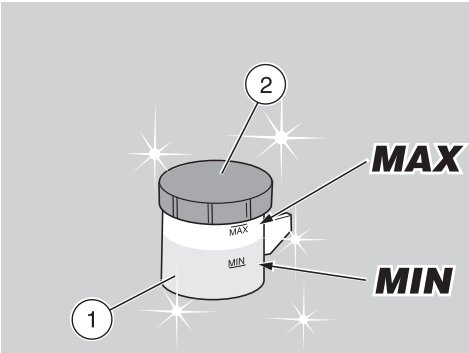

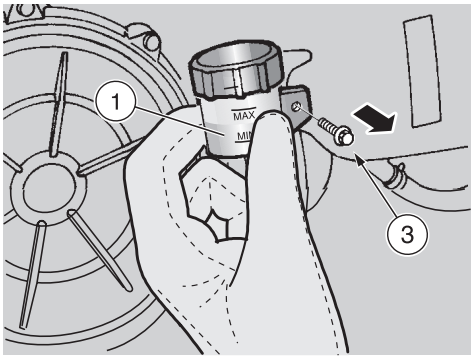

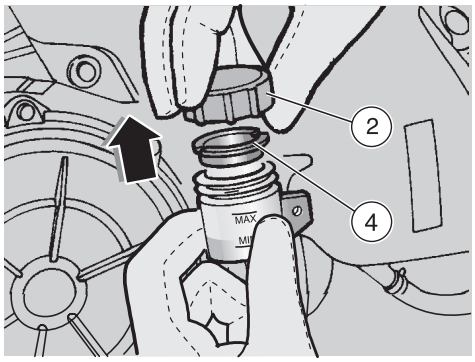

REAR BRAKE

CHECKING THE SYSTEM

NOTE Carry out these checks only on a firm, flat surface such as a concrete garage floor.

◆ Place the vehicle on the stand, see p. 82 (POSITIONING THE VEHICLE ON THE STAND).

NOTE If the reservoir is dirty, wipe it with a clean cloth so that you can see the "**MIN**" and "**MAX**" marks.

◆ Keep the vehicle vertical, so that the fluid contained in the reservoir (1) is parallel to the filler cup (2).

MIN = minimum level.

MAX = maximum level.

◆ Ensure that the fluid level contained in the brake reservoir (1) is above the "**MIN**" mark.

If the fluid does not reach the "**MIN**" mark:

⚠ CAUTION

When the disc pads wear out, the level of the fluid decreases progressively to compensate for their wear.

◆ Check the rear brake pad wear, p. 118 (CHECKING THE BRAKE PAD WEAR) and the rear disc wear.

If the pads and/or the disc do not need replacing:

◆ Top up the reservoir, see below (TOPPING UP) .

TOPPING UP

Carefully read p. 56 (BRAKES) and p. 57 (DISC BRAKES).

◆ Remove the right fairing, see p. 107 (REMOVING THE SIDE FAIRINGS).
◆ Unscrew the screw (3) completely.
◆ Slightly move the complete reservoir (1) outwards.

⚠ CAUTION

Do not operate the rear brake pedal with the reservoir filler cap (2) removed. This will cause brake fluid to squirt out and spill.

◆ Unscrew and remove the reservoir filler cap (2).

⚠ WARNING

Avoid any prolonged exposure of the brake fluid to the air.
The brake fluid is hygroscopic and when in contact with the air it absorbs its humidity.
Leave the brake fluid reservoir open ONLY for the time necessary for topping up.

NOTE In order not to spill the brake fluid while topping up, keep the fluid in the reservoir parallel to the reservoir rim.

◆ Remove the gasket (4).

Downloaded from www.Manualslib.com manuals search engine

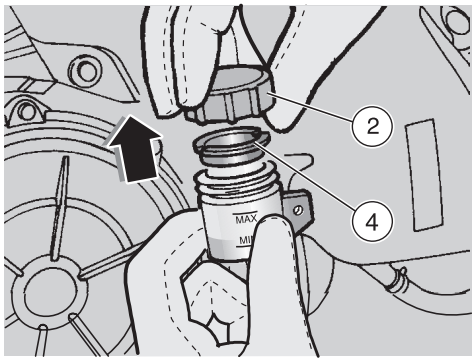

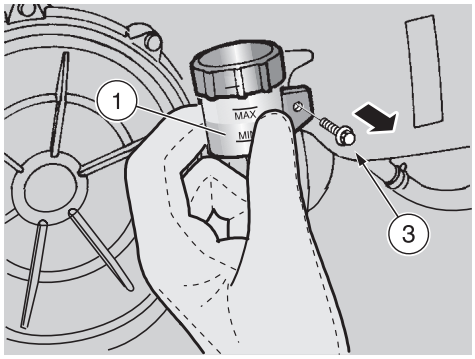

⚠ CAUTION

When topping up, never exceed the "MAX" level.
Top up to "MAX" only when new pads are installed.

⚠ CAUTION

Do not fill the reservoir to "MAX" with worn pads; this will cause fluid to overflow the reservoir when the pads are renewed.

NOTE In order to fill the reservoir to the "**MAX**" level, top up until the "**MAX**" mark is parallel with the brake fluid reservoir top parallel to the ground.

⚠ WARNING

Use only DOT 5 or 4 fluid taken from a clean, sealed container. Never reuse used brake fluid.

⚠ CAUTION

If you use any container or funnel for topping up, make sure that it is perfectly clean.
Any foreign matter getting into the brake reservoir may lead to severe damage.

⚠ WARNING

Do not add any additives or other substances to the brake fluid.

- Top up the reservoir with brake fluid, until the fluid reaches the "**MAX**" mark.
- Replace the gasket (4) in its seat correctly.
- Replace and tighten the reservoir filler cap (2).
- Replace the reservoir (1) in its seat correctly.
- Replace and tighten the screw (3).
- Replace the right fairing, see p. 107 (REMOVING THE SIDE FAIRINGS).

⚠ CAUTION

After servicing the brakes, always check them for function. If the stroke of the pedal is excessive, or if you detect that the effectiveness of the brakes is reduced in any way, have your vehicle serviced by your local aprilia Dealer.
It may be necessary to have your dealer bleed the system, or there may be some other problem with the brake system.

Never ride your vehicle in traffic immediately after servicing the brakes. Always apply the brake pedal several times before riding your vehicle. Then, try your vehicle in a parking lot or other safe area with little traffic to ensure that the brakes are working properly. Failure to observe this warning can lead to a serious accident with subsequent serious injury or death.

Downloaded from www.Manualslib.com manuals search engine

CLUTCH FLUID - recommendations

⚠ WARNING

Do not ride your vehicle with worn or malfunctioning clutch! The clutch is an important safety system of your vehicle, and using the bike with clutch that is anything less than perfect is very likely to lead to a collision or upset, with consequent risk of serious injury or death.

NOTE This vehicle is equipped with hydraulic clutch control.

⚠ WARNING

The clutch is extremely important for your safety. Do not use the vehicle if the clutch does not work perfectly. Always check the clutch efficiency before riding.

⚠ WARNING

If the "feel" or position of the clutch lever changes, this may be due to some problem in the hydraulic clutch system.

If you have any doubt regarding the perfect functioning of your clutch system, or if the normal pre-ride checks indicate any discrepancy, contact your local aprilia Dealer before riding.

⚠ CAUTION

Make sure that the cable is neither twisted nor worn out.
Prevent water or dust from accidentally getting into the circuit.

In case maintenance operations are to be performed on the hydraulic circuit, it is advisable to use latex gloves.

If the fluid gets in contact with the skin or the eyes, it can cause serious irritations.

Carefully wash the parts of your body that get in contact with the fluid. Consult a doctor or an oculist if the fluid gets in contact with your eyes.

DO NOT DISPOSE OF THE FLUID IN THE ENVIRONMENT.

KEEP AWAY FROM CHILDREN.

When using the fluid, take care not to spill it on the plastic and painted parts, since it damages them.

The clutch control fluid must be changed every two years by your local aprilia Dealer.

Use fluid of the type specified in the lubricant chart, see p. 144 (LUBRICANT CHART).

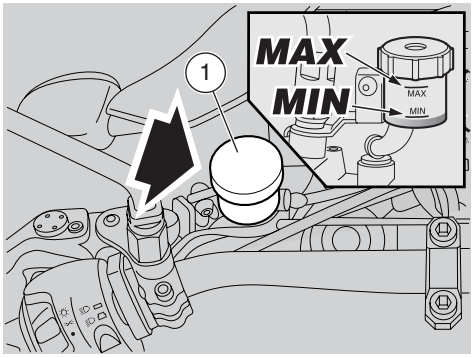

The clutch fluid reservoir (1) is positioned on the left part of the handlebar, near the clutch control lever coupling.

NOTE Perform the maintenance operations with half the indicated frequency if the vehicle is used in rainy or dusty areas, on uneven surfaces or on racetracks.

Before departure, check the fluid level in the tank, see p. 62 (CLUTCH); have it changed by your local **aprilia** Dealer every two years.

⚠ WARNING

Do not use the vehicle if you notice fluid leakages from the clutch control system.

Downloaded from www.Manualslib.com manuals search engine

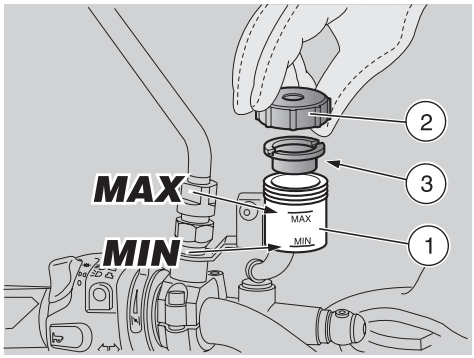

CLUTCH

NOTE Perform the maintenance operations with half the frequency indicated if the vehicle is used in rainy or dusty areas, on uneven surfaces or on racetracks.

Have the clutch checked by your local **aprilia Dealer** every 4687 mi (7500 km).

In case of use on racetracks:

have the clutch checked by your local **aprilia Dealer** every 2343 mi (3750 km).

NOTE The engine is provided with an hydraulic control clutch, aided by the PPC (Pneumatic Power Clutch) exclusive patented system, which avoids the bouncing of the rear wheel.

CHECK

- Position the vehicle on the stand, see p. 82 (POSITIONING THE VEHICLE ON THE STAND).
- Turn the handlebar completely rightwards.
- Make sure that the fluid level exceeds the "**MIN**" mark.
  MIN= minimum level
  MAX= maximum level
- If the fluid does not reach the "**MIN**" mark, provide for topping up.

TOPPING UP

Carefully read p. 61 (CLUTCH FLUID - recommendations).

⚠ CAUTION

The fluid may flow out. Do not operate the clutch control lever if the reservoir plug is loose or has been removed.

⚠ WARNING

Avoid any prolonged exposure of the clutch fluid to the air.
The clutch fluid is hygroscopic and when in contact with the air it absorbs its humidity.
Leave the clutch fluid reservoir open ONLY for the time necessary for topping up.

- Unscrew and remove the plug (2).

⚠ CAUTION

Do not shake the vehicle, in order not to spill fluid while topping up.
Do not put additives or other subtances into the fluid.
If you use a funnel or other similar items, make sure that they are perfectly clean.

- Remove the gasket (3).
- Top up the reservoir (1) by adding clutch fluid, see p. p. 144 (LUBRICANT CHART), until reaching the correct level included between the "**MIN**" and "**MAX**" marks.

⚠ CAUTION

Do not exceed the "MAX" level while topping up.

Check the clutch efficiency.

If the stroke of the clutch control lever is excessive or if the clutch system is not efficient, contact your local aprilia Dealer, since it may be necessary to bleed the system.

Downloaded from www.Manualslib.com manuals search engine

COOLANT

⚠ CAUTION

Do not use the vehicle if the coolant is below the minimum prescribed level.

Perform these maintenance operations at one-half of the specified intervals, if your vehicle is often used in rainy or very dusty conditions, on unpaved roads, or in any kind of competition.

Check the coolant level every 600 mi (1,000 km), before riding and after long trips.

⚠ CAUTION

Have the coolant changed by your local aprilia Dealer every 2 years.

⚠ WARNING

Coolant is poisonous! Do not ingest coolant under any circumstance. Should you get coolant in your mouth, rinse with cool water and immediately seek medical attention. Coolant is also very dangerous to your skin and eyes. Should you accidentally get coolant on your clothing or skin, change clothes immediately. Wash coolant from your skin with warm water and soap. Should you get coolant in your eyes, flush with plenty of cool water and seek professional medical help at once. Should someone swallow coolant accidentally, induce vomiting, rinse mouth with water, and immediately seek professional medical attention.

DISPOSE OF THE COOLANT PROPERLY.

BE SURE TO KEEP THE DRAINED COOLANT AWAY FROM CHILDREN AND PETS. IT IS SWEET TASTING, AS WELL AS EXTREMELY POISONOUS, AND IS VERY ATTRACTIVE TO CHILDREN AND PETS.

Use extra caution not to spill the coolant on any hot parts of the engine. It is flammable, and can emit invisible, noxious fumes.

Always wear rubber or latex gloves when servicing the cooling system.

Have the coolant changed by your local aprilia Dealer.

The coolant is made up of 50% water and 50% antifreeze.

This mixture is ideal for most running temperatures and ensures good protection against corrosion.

It is advisable to keep the same mixture also in the hot season, since in this way losses due to evaporation are reduced and it is not necessary to top up very frequently.

The mineral salt deposits left in the radiator by evaporated water are thus reduced and the efficiency of the cooling system remains unchanged.

If the outdoor temperature is below 0°C, check the cooling circuit frequently and if necessary increase the antifreeze concentration (up to maximum 60%).

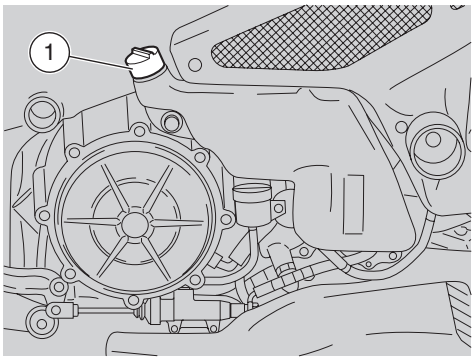

⚠ CAUTION

Use only distilled water when topping off the cooling system. This will reduce damage to the engine.

⚠ WARNING

Do not add any additives or other substances to the coolant.

The coolant is very hot.

Do not remove the filler cap (1) when the engine is hot since the coolant is under pressure and it will splash out violently.

If it gets in contact with the skin or with your clothing, it may cause severe burns.

Downloaded from www.Manualslib.com manuals search engine

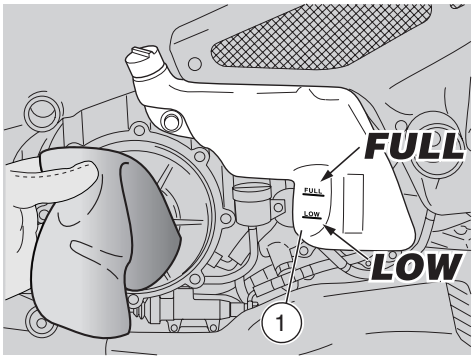

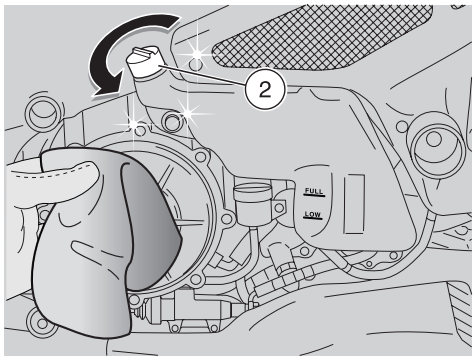

CHECKING AND TOPPING UP

⚠ WARNING

Check the coolant level and top up the expansion reservoir with cold engine.

- Stop the engine and wait until it has cooled down.
- Keep the vehicle in vertical position, with the two wheels resting on the ground.
- Make sure that the coolant contained in the expansion reservoir (1) is included between the "**FULL**" and "**LOW**" marks, by checking through the appropriate slot on the right fairing".

  FULL = maximum level
  LOW = minimum level

If not, proceed as follows:

- Unscrew and remove the filling cap (2).

⚠ WARNING

The coolant is toxic: do not swallow it; if the coolant gets in contact with the skin or the eyes, it can cause serious irritations.
Do not use your fingers or any other object to check if there is enough coolant.

⚠ CAUTION

Do not put additives or other subtances into the fluid.

If you use a funnel or other similar items, make sure that they are perfectly clean.

- Top up the expansion reservoir by adding coolant, see p. 144 (LUBRICANT CHART), until this almost reaches the "**FULL**" level. Do not exceed this level, otherwise the fluid will flow out while the engine is running.
- Put back the filling cap (2).

⚠ CAUTION

In case of excessive consumption of coolant and in case the expansion reservoir remains empty, make sure that there are no leaks in the circuit. Have it repaired by your local aprilia Dealer.

Downloaded from www.Manualslib.com manuals search engine

TIRES

This vehicle is provided with tubeless tires.

NOTE Perform the maintenance operations with half the frequency indicated if the vehicle is used in rainy or dusty areas, on uneven surfaces or on racetracks.

⚠ WARNING

Check the inflation pressure at room temperature every two weeks.
Check the conditions of the tires and the inflation pressure at room temperature after the first 625 mi (1000 km) and successively every 4687 mi (7500 km), see p. 140 (TECHNICAL DATA).

If the tires are hot, the measurement is not correct. Carry out the measurement especially before and after long rides.

If the inflation pressure is too high, the ground unevenness cannot be dampened and is therefore transmitted to the handlebar, thus compromising the driving comfort and reducing the road holding during turns.

If, on the contrary, the inflation pressure is too low, the tire sides (1) are under greater stress and the tire itself may slip on the rim or it may become loose, with consequent loss of control of the vehicle.

In case of sudden braking the tires could even come off the rims.

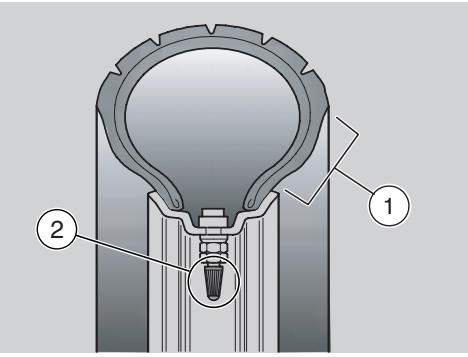

Further, the vehicle could skid while turning.

⚠ WARNING

Check the surface and the wear of the tires, since tires in bad conditions can impair both the grip and the controllability of the vehicle.

Some types of tires homologated for this vehicle are provided with wear indicators.
There are several kinds of wear indicators. For more information on how to check the wear, contact your Dealer.
Visually check if the tires are worn and in this case have them changed.
Change the tire when it is worn out or in case of puncture on the tread side, if the puncture is larger than 5 mm.
After repairing a tire, have the wheels balanced.

⚠ WARNING

The tires must be replaced with other tires of the type and model recommended by the manufacturer, see p. 140 (TECHNICAL DATA); the use of tires different from those prescribed may affect the manoeuvrability of the vehicle.

Do not install tires with air tube on rims for tubeless tires and viceversa.

Make sure that the inflation valves (2) always have their sealing caps on, to prevent the tires from suddenly going flat.

Change, repair, maintenance and balancing operations are very important and therefore they must be performed by qualified technicians with appropriate tools.

For this reason, it is advisable to have the above mentioned operations carried out by your local aprilia Dealer or by a qualified tire repairer. If the tires are new, they may still be covered with a slippery film: drive carefully for the first miles.

Do not oil the tires with unsuitable fluids. If the tires are old, even if not completely worn out, they may become hard and may not ensure good road holding.

In this case, replace them.

Downloaded from www.Manualslib.com manuals search engine

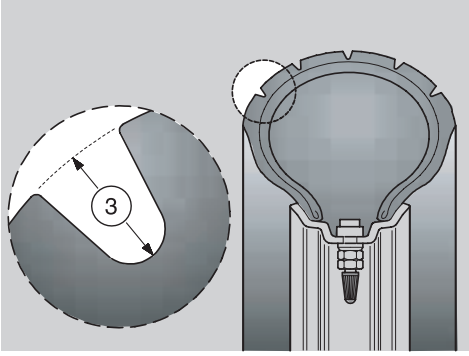

MINIMUM TREAD DEPTH LIMIT (3):

front and rear 0.079±0.118 inc (2 mm) (o 3 mm) and in any case not less than prescribed by the regulations in force in the country where the vehicle is used.

ENGINE OIL

⚠ WARNING

Engine oil may cause serious damage to the skin if handled daily and for long periods.

Wash your hands carefully after use.

KEEP AWAY FROM CHILDREN.

DO NOT DISPOSE OF THE OIL IN THE ENVIRONMENT.

Put it in a sealed container and take it to the filling station where you usually buy it or to an oil salvage center.

In case any maintenance operation should be required, it is advisable to use latex gloves.

⚠ CAUTION

If the engine oil pressure warning light LED " - " comes on during the normal operation of the engine, this means that the engine oil pressure in the circuit is insufficient.

In this case, check the engine oil level, see p. 91 (CHECKING THE ENGINE OIL LEVEL AND TOPPING UP); if the level is not correct, stop the engine immediately and contact your local aprilia Dealer.

⚠ CAUTION

Proceed with care.

Do not spill the oil!

Take care not to smear any component, the area in which you are working and the surrounding area. Carefully remove any trace of oil.

In case of leakages or malfunctions, contact your local aprilia Dealer.

Periodically check the engine oil level, see p. 91 (CHECKING THE ENGINE OIL LEVEL AND TOPPING UP).

For the engine oil change, see p. 85 (REGULAR SERVICE INTERVALS CHART) and p. 93 (CHANGING THE ENGINE OIL AND THE OIL FILTER).

NOTE Use high-quality 15W – 50 oil, see p. 144 (LUBRICANT CHART).

Downloaded from www.Manualslib.com manuals search engine

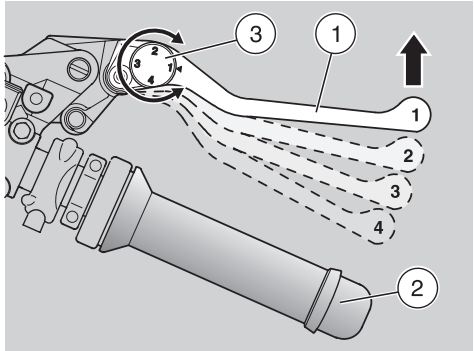

ADJUSTING THE FRONT BRAKE CONTROL LEVER AND THE CLUTCH CONTROL LEVER

It is possible to adjust the distance between the lever (1) end and the grip (2), by rotating the adjuster (3).

The positions "**1**" and "**4**" correspond to an approximate distance of 4.134±2.953 inc (105 and 75 mm) , respectively, between the lever end and the grip.

The positions "**2**" and "**3**" correspond to intermediate distances.

x Push the control lever (1) forward and rotate the adjuster (3) until the desired number is positioned in correspondence with the reference arrow.

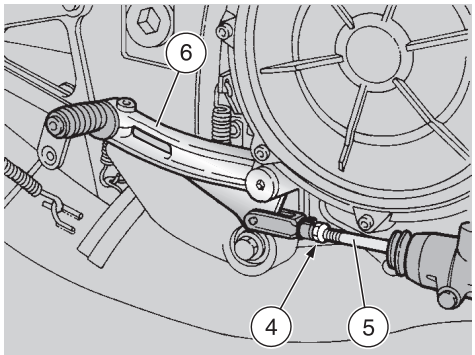

ADJUSTING THE REAR BRAKE CONTROL LEVER CLEARANCE

The brake control lever is positioned ergonomically during the assembly of the vehicle.

If necessary, it is possible to adjust the brake control lever clearance:

- Remove the lower fairing, see p. 107 (REMOVING THE LOWER FAIRING).
- Loosen the lock nut (4).
- Unscrew the master cylinder control rod (5) to ensure a minimum clearance of **0.020±0.039 inc** (**0.5 – 1 mm**) between the rod and the master cylinder piston.

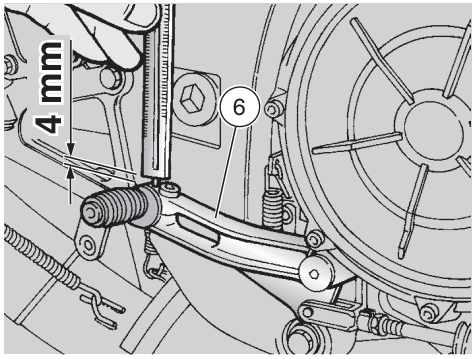

⚠ CAUTION

Make sure that there is a certain idle stroke in the movement of the lever (6), to prevent the brake from remaining applied and the consequent untimely wear of the braking elements.

Lever (6) idle stroke: 0.157 inc (4 mm) (measured at the lever end).

- Lock the pump control rod (5) by means of the lock nut (4).

⚠ CAUTION

After the adjustment, make sure that the wheel rotates freely with released brake.
Check the braking efficiency.
If necessary, contact your local aprilia Dealer.

Downloaded from www.Manualslib.com manuals search engine

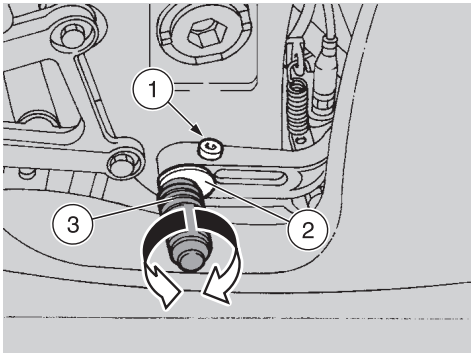

ADJUSTING THE REAR BRAKE CONTROL LEVER AND THE GEAR SHIFT LEVER

The control levers are positioned ergonomically during the assembly of the vehicle.

If necessary, it is possible to adjust the position of the levers.

- Position the vehicle on the stand, see p. 82 (POSITIONING THE VEHICLE ON THE STAND).
- Partially unscrew the screw (1).
- Rotate the eccentric (2) in order to find the optimal position of the pedal (3).
- Tighten the screw (1) and make sure that the eccentric is stable in its position.

⚠ CAUTION

If it is necessary to further adjust the gear shift lever, contact your local aprilia Dealer.

EXHAUST SILENCER/EXHAUST TERMINAL

⚠ WARNING

Tampering with the noise control system is prohibited.

Owners are warned that the law may forbid:

– any person, other than for purposes of maintenance, repair or replacement to remove or render inoperative any device or element of design incorporated into any new vehicle – for the purpose of noise control – prior to its sale or delivery to the ultimate purchaser or while it is in use;
– the use of the vehicle after such device or element of design has been removed or rendered inoperative by any person.

Check the exhaust silencer and the silencer pipes, making sure that there are neither signs of rust, nor holes and that the exhaust system works effectively.

If the noise produced by the exhaust system increases, immediately contact your local **aprilia Dealer**.

Downloaded from www.Manualslib.com manuals search engine

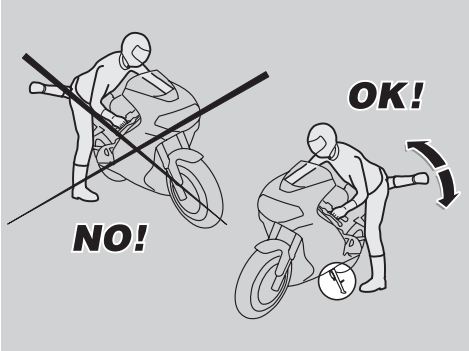

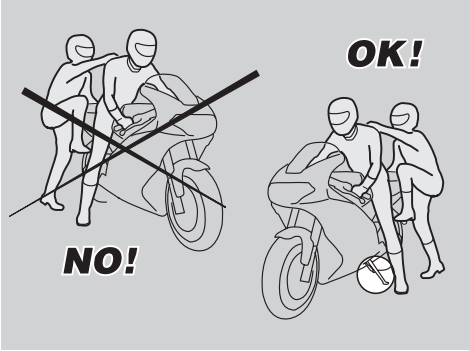

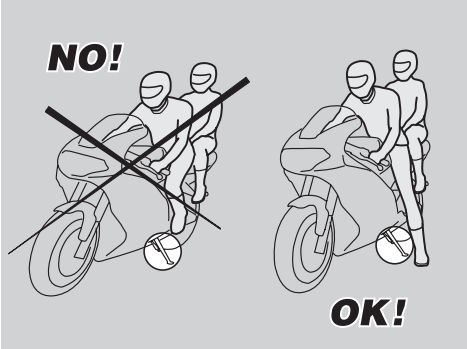

GETTING ON AND OFF THE VEHICLE

The instructions below must be followed with the maximum care in order to avoid any injury to persons and damage to property and to the vehicle, caused by the falling of the rider or the passenger from the vehicle and/or the falling or overturning of the vehicle itself.

⚠ WARNING

Risk of falling and overturning.
Proceed with care.

The operations and movements required to get on and off the vehicle must be performed with complete freedom of movement and with the hands free from obstruction caused by holding objects, the helmet, gloves or glasses. Get on and off the vehicle only from the left side and always with extended side stand.

⚠ CAUTION

Do not apply the load of your weight or of the passenger's weight onto the side stand.

The stand has been designed to support the weight of the vehicle and a minimum load, without the rider and the passenger.

Getting on the vehicle into the riding position with extended side stand is permitted only for the purpose of preventing the vehicle from falling or overturning and does not envision the loading of the weight of the rider and passenger onto the side stand.

While getting on and off, the weight of the vehicle may cause an unbalance and the consequent loss of equilibrium, and the vehicle may fall or overturn.

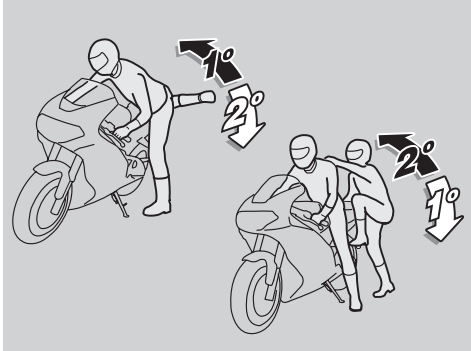

NOTE The rider must always be the first person to get on the vehicle and the last to get off and it is the rider who controls the balance and stability of the vehicle when the passenger gets on and off.

Downloaded from www.Manualslib.com manuals search engine

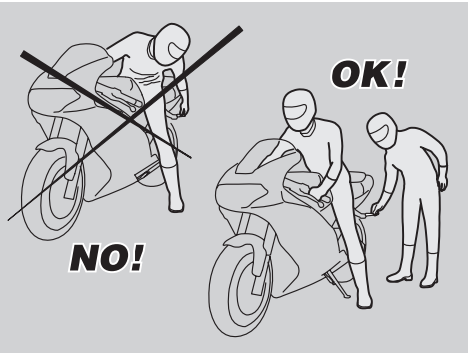

When getting on and off the vehicle, the passenger must make careful movements, in order to maintain the balance of the vehicle and the rider.

NOTE The rider is responsible for instructing the passenger how to safely get on and off the vehicle.

The vehicle is equipped with special passenger footpegs to make it easier to get on and off the vehicle. The passenger must always use the left footpeg to get on and off the vehicle.

Neither get off, nor try to get off the vehicle by jumping or stretching your leg down to the ground. In both cases this would compromise the stability and balance of the vehicle.

NOTE Bags or objects strapped to the rear of the vehicle can represent an obstacle while getting on and off.

In any case, perform a controlled movement with your right leg, which must avoid striking and safely pass the rear part of the fairing or the luggage without creating unbalance.

GETTING ON THE VEHICLE

- Grasp the handlebar correctly and get on the vehicle without loading your weight onto the side stand.

NOTE If it is impossible for you to place both feet on the ground, place the right foot on the ground (in case of unbalance, the left side of the vehicle is prevented from falling over by the side stand) and keep the left foot ready to rest on the ground.

- Place both feet on the ground and straighten the vehicle into riding position while keeping it in balance.

NOTE The rider must not extract or attempt to extract the passenger footrest while seated astride the vehicle, because this might compromise the stability and balance of the vehicle.

- Have the passenger extract the two passenger footpegs.
- Instruct the passenger how to safely get on the vehicle.
- Kick the side stand completely back using your left foot.

GETTING OFF THE VEHICLE

- Choose the parking area, see p. 81 (PARKING).
- Stop the vehicle, see p. 81 (STOPPING).

⚠ WARNING

Make sure that the parking surface is free from obstacles, firm and flat.

- With the left shoe heel, extend the side stand completely by acting on the appropriate lever.

NOTE If it is impossible for you to place both feet on the ground, place the right foot on the ground (in case of unbalance, the left side of the vehicle is prevented from falling over by the side stand) and keep the left foot ready to rest on the ground.

- Place both feet on the ground, keeping the vehicle in balance in riding position.
- Instruct the passenger how to safely get off the vehicle.

⚠ CAUTION

Risk of falling and overturning.
Make sure that the passenger has got off the vehicle.
Do not load your weight onto the side stand.

- Incline the vehicle until the stand rests on the ground.
- Grasp the handlebar correctly and get off the vehicle.
- Rotate the handlebar completely leftwards.
- Lift the passenger footpegs.

⚠ CAUTION

Make sure that the vehicle is stable.

Downloaded from www.Manualslib.com manuals search engine

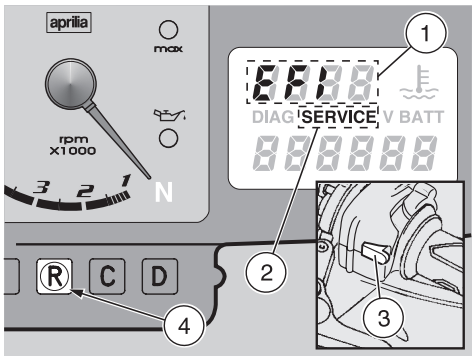

PRELIMINARY CHECKING OPERATIONS

⚠ CAUTION

Before departure, always carry out a preliminary check of the vehicle to make sure that it functions correctly and safely, see the following table (PRELIMINARY CHECKING OPERATIONS).
Failure to perform these checking operations can cause severe personal injuries or damages to the vehicle.

Do not hesitate to consult your local **aprilia Dealer** in case there is something you do not understand about the functioning of some controls or in case you suspect or discover some irregularities.

It does not take long to carry out a check-up and this operation ensures you much more safety.

NOTE This vehicle is set so that any anomaly stored by the electronic control unit can be detected in real time.

Whenever the ignition switch is brought to position "1", the writing "*EFI*" (1) appears on the right side of the multifunction display for approximately three seconds.

⚠ CAUTION

If the writing "efi" (1) is displayed during the normal operation of the engine, this means that the electronic unit has detected an anomaly. In many cases, the engine keeps running with reduced performance levels; immediately contact your local aprilia Dealer.

⚠ CAUTION

After the first 625 mi (1000 km) and successively every 4687 mi (7500 km), the word "SERVICE" (2) appears on the right display.

In this case contact your local aprilia Dealer, who will carry out the operations indicated in the regular service intervals chart, see p. 85 (REGULAR SERVICE INTERVALS CHART). To make the writing "SERVICE" disappear, press the "LAP" push button (3) and then the push button 1 (4) and keep them pressed for about five seconds.

⚠ WARNING

If the throttle sticks open, it may cause a collision with another vehicle, or an upset.

If the throttle sticks, kill the engine with the engine stop switch located on the right handlebar.
Do not attempt to restart the engine until the throttle has been repaired and works perfectly. Failure to obey this warning can lead to a runaway with seriously injuries or even death.

Downloaded from www.Manualslib.com manuals search engine

Your vehicle is equipped with a double cable throttle. One cable opens the throttle when you rotate the throttle grip toward you; the other closes the throttle when you rotate the grip away from you. It is essential, when you release the throttle grip, that it automatically return to the idle position.

This double cable arrangement enhances safety by providing for positive closing of the throttle.

⚠ WARNING

In the event of a throttle sticking emergency, always kill the engine using the engine stop switch located near the throttle grip on the right handlebar. Never use your vehicle if the throttle does not automatically fully return to the idle position when the throttle grip is released. Contact your local aprilia Dealer for repairs. Failure to heed this warning can lead to a serious accident and subsequent injury or even death.

If any fastener is loose, the rider may lose control of the vehicle and risk an accident.

Both situations may cause serious injuries or even death.

Downloaded from www.Manualslib.com manuals search engine

PRELIMINARY CHECKING OPERATIONS

Component	Check	Page
Front and rear disc brakes	Check the functioning, the idle stroke of the control levers, the fluid level and make sure there are no leaks. Check the wear of the pads. If necessary, top up the fluid reservoir.	56, 57, 58, 59, 118
Accelerator	Make sure that it works smoothly and that it is possible to open and close it completely, in all steering positions. If necessary, adjust and/or lubricate it.	119
Engine oil	Check and/or top up if necessary.	65, 91
Wheel/tires	Check the tire surface, the inflation pressure, wear and any damage. Remove any foreign matter that may be stuck in the tread grooves.	65
Brake levers	Make sure that they work smoothly. Lubricate the joints and adjust the stroke if necessary.	67, 68
Clutch	Check the operation of the clutch, the idle stroke of the control lever, the fluid level and any leaks. If necessary, top up the fluid; the clutch must operate without jerking and/or slipping.	61, 62
Steering	Make sure that the steering rotates smoothly, without any clearance or slackening.	–
Side stand	Make sure that it operates correctly. Make sure that when the stand is let up or down there is no friction and that the spring tension brings it back to its normal position. If necessary, lubricate joints. Make sure that the safety switch operates correctly.	122, 127
Fastening elements	Make sure that the fastening elements are not loose. If necessary, adjust or tighten them.	–
Drive chain	Check the slack.	104, 105
Fuel tank	Check the fuel level and top up, if necessary. Check the circuit for leaks. Make sure that the fuel cap is correctly closed.	53, 106
Coolant	The coolant level in the expansion tank must be included between the “**FULL**” and “**LOW**” marks.	63, 64
Engine stop switch (" 1 - ! 0)	Make sure that it operates correctly.	47
Lights, warning lights, horn, rear stoplight switch and electric devices	Check the proper functioning of the acoustic and visual devices. Change the bulbs or intervene in case of failure.	123 – 135

Downloaded from www.Manualslib.com manuals search engine

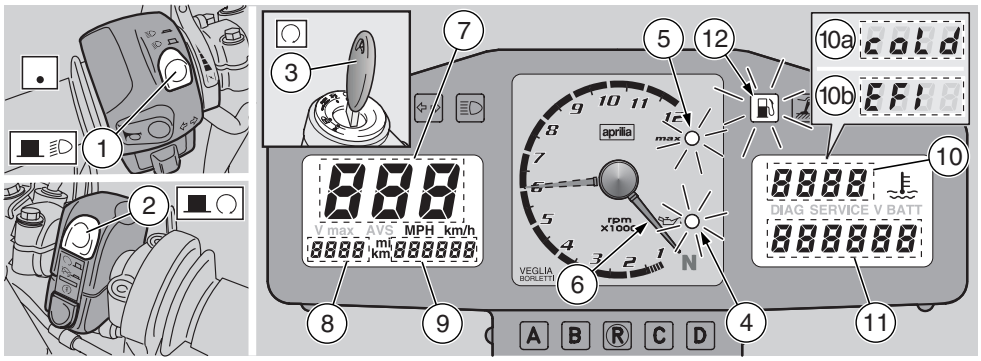

STARTING

⚠ WARNING

This vehicle is considerably powerful and must be used gradually and with the greatest care.

Do not position any object inside the front fairing (between the handlebar and the dashboard), in order not to hinder the rotation of the handlebar and visibility toward the dashboard.

NOTE Before starting the engine, carefully read chapter "Safe drive", see p. 5 (SAFE DRIVE).

⚠ WARNING

Exhaust gases contain carbon monoxide, which is extremely toxic if inhaled.
Avoid starting the engine in closed or badly-ventilated rooms.

Failure to observe this warning may cause loss of consciousness or even lead to death by asphyxia.

NOTE With the side stand down, the engine can be started only if the gears are in neutral; in this case, if you try to engage the gears, the engine stops.

With the side stand up, it is possible to start the engine either in neutral gear or with engaged gears and pulled in clutch lever.

- ◆ Get on the vehicle in riding position, see p. 69 (GETTING ON AND OFF THE VEHICLE).
- ◆ Make sure that the stand is completely up.
- ◆ Make sure that the dimmer switch (1) is in position " 7 ".
- ◆ Move the engine stop switch (2) to position " 1 ".
- ◆ Rotate the key (3) and move the ignition switch to position " 1 ".

At this point:

– The engine oil pressure LED warning light (red) " - " (4) comes on on the dashboard and remains on until the engine has been started;
– the red line warning light LED "***max***" (red) (5) comes on on the dashboard for approximately three seconds and the revolution counter pointer (6) shifts to the preset red line threshold;
– the left display shows the instantaneous speed (7), the trip (8) and total (9) kilometers/miles odometer;
– the coolant temperature (10) and the digital clock (11) appear on the right display (multifunction).

NOTE When the engine is cold, the writing " 8 " (11a) blinks.

Whenever the ignition switch is turned to position " 1 ", the writing "*EFI*" (10b) is displayed for about three seconds.

– the fuel pump will pressurize the fuel supply circuit, sending out a hum for about three seconds.

⚠ CAUTION

If the low fuel warning light " , " (12) comes on on the dashboard, provide for topping up as soon as possible, see p. 53 (FUEL).

Downloaded from www.Manualslib.com manuals search engine

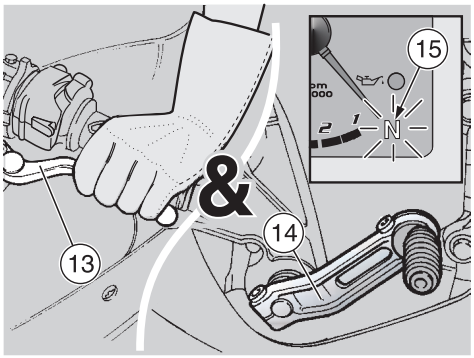

NOTE It is possible to set the unit of measurement of the speedometer (km or mi) and of the coolant temperature (°C or °F), the red line threshold, the clock functions and if necessary the chronometer, see p. 40 (MULTIFUNCTION COMPUTER).

⚠ WARNING

The red line threshold is set at 6000 rpm by aprilia. Increase the threshold gradually as you get acquainted with the vehicle.
During running-in, never exceed the recommended rpm, see p. 80 (RUNNING-IN).

- Lock at least one wheel, by pulling a brake lever.
- Pull the clutch lever (13) completely and shift the gearbox lever (14) into neutral [green warning light " . " (15) on].
- If the vehicle is started with cold engine, rotate the cold start lever " / " (16) downwards.

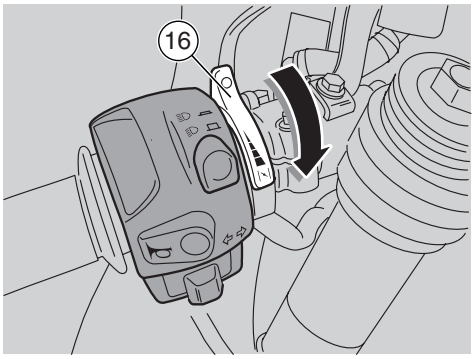

⚠ CAUTION

To avoid excessive consumption of the battery, do not keep the start push button " * " pressed for more than fifteen seconds.
If the engine does not start in this lapse of time, wait ten seconds and press the start push button " * " again.

- Press the start push button " * " (17) without accelerating and release it as soon as the engine starts.

⚠ CAUTION

Avoid pressing the start push button " * " (17) when the engine is running, since you may damage the starter motor.

If the engine oil pressure warning light " - " (4) remains on, or if it comes on during the normal operation of the engine, this means that the oil pressure in the circuit is insufficient.

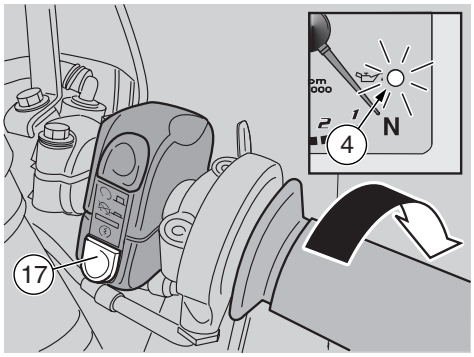

In this case, stop the engine immediately and contact your local aprilia Dealer.

- Keep at least one brake lever pulled and do not accelerate until you start.

⚠ CAUTION

Never leave abruptly with cold engine.
To reduce the emission of polluting substances and the consumption of fuel, warm the engine up by proceeding at low speed for the first miles.

Downloaded from www.Manualslib.com manuals search engine

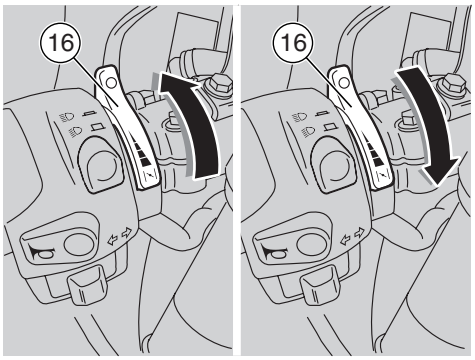

◆ Rotate the cold start lever "/" (16) upwards after the engine has warmed up.

⚠ CAUTION

If the writing "*EFI*" appears, on the right display (multifunction) during the normal operation of the engine, this means that the electronic unit has detected an anomaly.
In many cases, the engine keeps running with reduced performance levels; immediately contact your local aprilia Dealer.

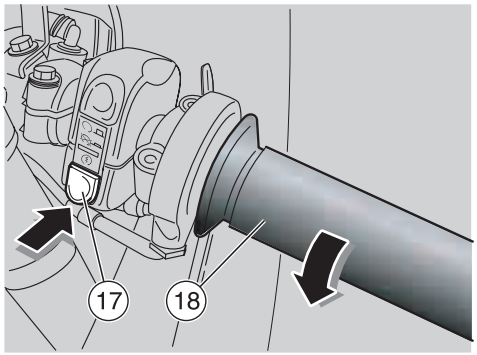

STARTING WITH COLD ENGINE

If the room temperature is low (near to or lower than 32°F /0°C), it may be difficult to start the vehicle at the first attempt.

In this case:

◆ Rotate the cold start lever "/" (16) downwards.
◆ Insist for at least ten seconds with the start push button "*" (17) pressed and at the same time moderately rotate the throttle grip (18).

If the engine starts:

◆ Release the start push button "*" (17) and the throttle grip (18).
◆ Rotate the cold start lever "/" (16) upwards.
◆ If the idling is unstable, twist the throttle grip (18) slightly and frequently.

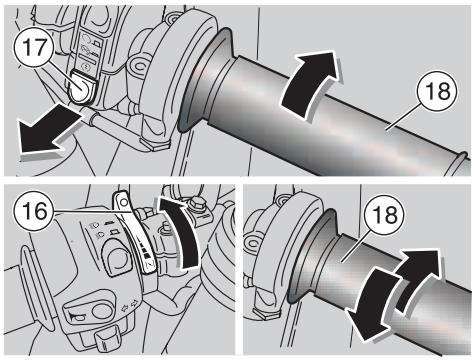

If the engine does not start:

Wait a few seconds and repeat the COLD START PROCEDURE.

Downloaded from www.Manualslib.com manuals search engine

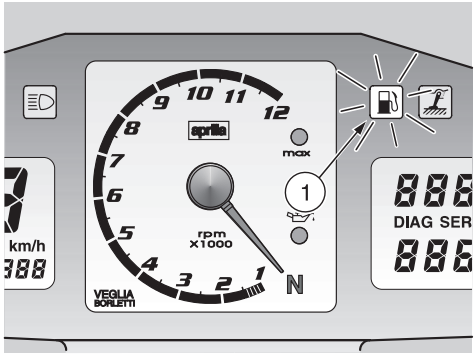

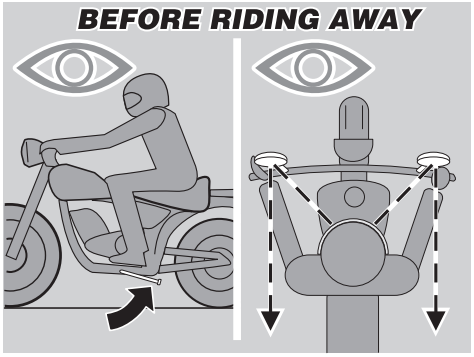

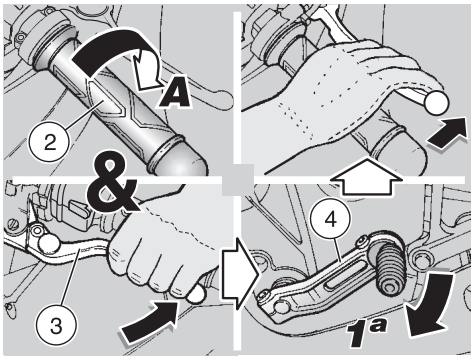

DEPARTURE AND DRIVE

⚠ WARNING

This vehicle is considerably powerful and must be used gradually and with the greatest care.
Do not position any object inside the front fairing (between the handlebar and the dashboard), in order not to hinder the rotation of the handlebar and visibility toward the dashboard.

NOTE Before departure, carefully read the "Safe drive" chapter, see p. 5 (SAFE DRIVE).

⚠ CAUTION

If the low fuel warning light " , " (1) positioned on the dashboard comes on while the vehicle is running, this means that 1.189±0.264 US gal (4.5±1ℓ) of fuel are still available in the tank. Provide for topping up as soon as possible, see p. 53 (FUEL).

⚠ WARNING

If you drive without passenger, make sure that the passenger footpegs are folded.
While riding, keep your hands on the grips and your feet on the footpegs.

NEVER RIDE IN ANY POSITION OTHER THAN THOSE INDICATED.

⚠ WARNING

If you drive with a passenger, instruct him/her so that he/she does not create problems during manoeuvres.

Before leaving, make sure that the stand is completely up.

To leave:

- Start the engine, see p. 74 (STARTING).
- Adjust the inclination of the rear-view mirrors correctly.

⚠ CAUTION

With the vehicle at rest, try to get acquainted with the use of the rear-view mirrors. The reflecting surface is convex, therefore the objects seem to be farther away than they actually are. These mirrors offer a "wide-angle" view and only experience will allow you to evaluate the distance of the following vehicles correctly.

- With released throttle grip (2) (**Pos.A**) and engine idling, pull the clutch lever (3) completely.
- Engage the first gear, by pushing the gear lever (4) downwards.
- Release the brake lever (pulled on the starting).

Downloaded from www.Manualslib.com manuals search engine

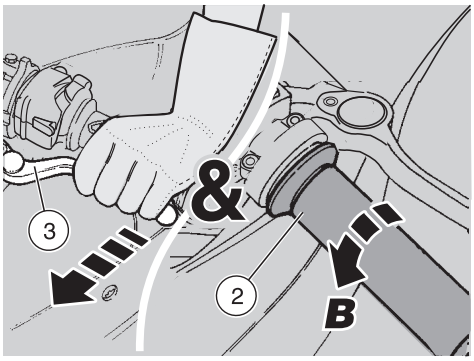

⚠ WARNING

On departure, the abrupt release of the clutch lever may cause the engine to stall or the vehicle to jerk forwards.

Never accelerate abruptly or excessively when releasing the clutch lever, in order to prevent the clutch from "slipping" (slow release) or the front wheel from raising "rearing up" (quick release).

◆ Slowly release the clutch lever (3) and at the same time accelerate by rotating the throttle grip moderately (2) (**Pos.B**).

The vehicle will start moving.

◆ Ride at reduced speed for the first miles, in order to warm the engine up.

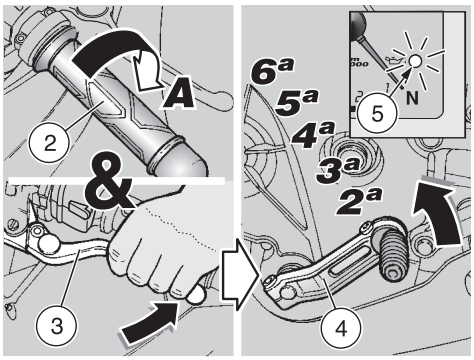

⚠ CAUTION

Never exceed the recommended rpm, see p. 80 (RUNNING-IN).

◆ Increase the speed by gradually rotating the throttle grip (2) (**Pos.B**), without exceeding the recommended rpm, see p. 80 (RUNNING-IN).

To engage the second gear:

⚠ CAUTION

Proceed quickly.
Never ride the vehicle at too low rpm.

◆ Release the throttle grip (2) (**Pos.A**), pull the clutch lever (3) and lift the gear shift lever (4). Release the clutch lever (3) and accelerate.
◆ Repeat the last two operations and shift up.

⚠ CAUTION

If the engine oil pressure warning light LED " - " (5) comes on during the normal operation of the engine, this means that the engine oil pressure in the circuit is insufficient.

In this case, stop the engine immediately and contact your local aprilia Dealer.

The downshifting should be carried out in the following situations:

◆ When riding downhill or when braking, in order to increase the braking action by using the compression of the engine.
◆ When riding uphill, if the gear engaged is not suitable to the speed (high gear, moderate speed) and the engine rpm decreases.

⚠ CAUTION

Shift the gears one by one; the simultaneous downshifting of more than one gear may make you exceed the maximum rpm (red line).
Before and during the downshifting, release the throttle grip and decelerate, in order to avoid the "red line".

Downloaded from www.Manualslib.com manuals search engine

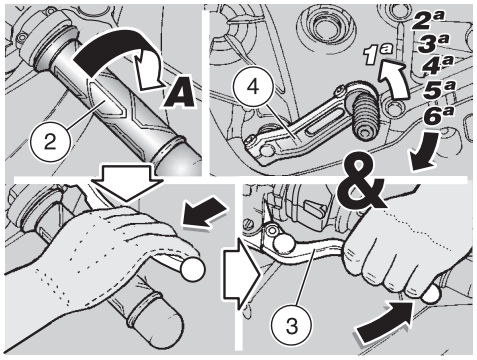

To shift down, proceed as follows:

- Release the throttle grip (2) (**Pos.A**).
- If necessary, pull the brake levers moderately and decrease the speed of the vehicle.
- Pull the clutch lever (3) and lower the shifting lever (4) to shift down.
- If the brake levers are pulled, release them.
- Release the clutch lever and accelerate moderately.

⚠ CAUTION

If the writing "LLL" appears on the right side of the multifunction display, stop the vehicle and let the engine run at 3000 rpm for approximately two minutes, thus allowing the coolant to circulate regularly in the system; then press the engine stop switch to position " " 0 " and check the coolant level, see p. 63 (COOLANT).

If the writing "LLL" is still displayed after the coolant level has been checked, contact your local aprilia Dealer.

Do not turn the ignition switch to position " 0 ", since the cooling fans would stop regardless of the coolant temperature and in this case the temperature would increase further.

If the writing "EFI" appears, on the right display (multifunction) during the normal operation of the engine, this means that the electronic unit has detected an anomaly.

In many cases, the engine keeps running with reduced performance levels; immediately contact your local aprilia Dealer.

To avoid the overheating of the clutch, keep the engine running with vehicle at rest, engaged gears and pulled clutch lever for the shortest time possible.

⚠ WARNING

Avoid opening and closing the throttle grip repeatedly and continuously, so that you do not accidentally lose control of the vehicle. If you have to brake, close the throttle and pull both brakes in order to obtain uniform deceleration, properly exerting pressure on the braking parts.

By pulling the front brake only or the rear brake only, you reduce the braking force considerably, thus running the risk of locking one wheel and consequently losing grip.

If you stop uphill, decelerate completely and use the brakes only to keep the vehicle steady.

The use of the engine to keep the vehicle steady may cause the overheating of the clutch.

Before beginning to turn, slow down or brake driving at moderate and constant speed or accelerating slightly; avoid braking at the last moment: it would be very easy to skid.

If the brakes are operated continuously on downhill stretches, the friction surfaces may overheat, thus reducing the braking efficiency. Exploit the engine compression and shift down by pulling both brakes intermittently.

Never drive downhill with the engine off!

When visibility is insufficient, switch on the low beam even during the day, in order to make your vehicle more visible. In case of wet ground or scarce wheel grip (snow, ice, mud, etc.), drive slowly, avoiding sudden brakings or manoeuvres that could make you lose grip and fall down.

Downloaded from www.Manualslib.com manuals search engine

⚠ WARNING

Pay the utmost attention to any obstacle or variation of the ground.

Uneven roads, rails, manhole covers, indications painted on the road surface, building site metal plates become rather slippery by rain. For this reason all these obstacles have to be carefully avoided, driving smoothly and leaning the vehicle as little as possible.

Always use the direction indicators in time when you intend to change lane or direction, avoiding sharp and dangerous movements.

Switch off the direction indicators as soon as you have changed direction.

Be extremely careful when you overtake other vehicles or are overtaken.

In case of rain, the water cloud created by big vehicles reduces visibility; the air shift may make you lose control of the vehicle.

RUNNING-IN

The running-in of the engine is essential to ensure its duration and correct functioning.

If possible, drive on hilly roads and/or roads with many bends, so that the engine, the suspensions and the brakes undergo a more effective running-in.

During running-in, change speed.

In this way the components are first "loaded" and then "relieved" and the engine parts can thus cool down.

Even if it is important to stress the engine components during running-in, take care not to exceed.

NOTE Only after the first 937 mi (1500 km) of running-in you can expect the best performance levels from the vehicle.

Keep to the following indications:

- Do not open the throttle completely if the speed is low, both during and after the running-in.
- During the first 62 mi (100 km) pull the brakes with caution, avoiding sharp and prolonged brakings. This ensures a correct bedding-in of the pads on the brake disc.
- During the first 625 mi (1000 km) never exceed 6000 rpm.

⚠ WARNING

After the first 625 mi (1000 km), have your local aprilia Dealer carry out the checks indicated in the column "After running-in" of the regular service intervals chart, see p. 85 (REGULAR SERVICE INTERVALS CHART), in order to avoid hurting yourself or other people and/or damaging the vehicle.

Between the first 1000 km (625 mi) and 937 mi (1500 km) drive more briskly, change speed and use the maximum acceleration only for a few seconds, in order to ensure better coupling of the components; never exceed 7500 rpm (see table).

After the first 937 mi (1500 km) you can expect better performance from the engine, however, without exceeding the maximum allowed (10500 rpm).

Engine maximum rpm recommended	
Mileage mi (km)	**rpm**
0 – 625 (0 – 1000)	6000
625 – 937 (1000 – 1500)	7500
over 937 (1500)	10500

Downloaded from www.Manualslib.com manuals search engine

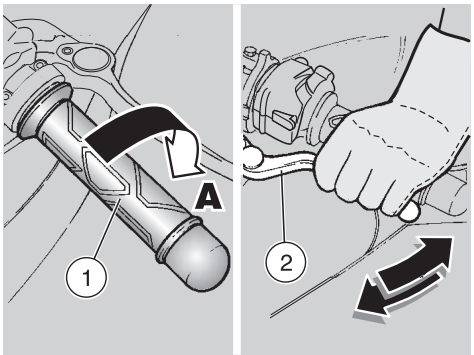

STOPPING

⚠ WARNING

If possible, avoid stopping abruptly, slowing down suddenly and braking at the last moment.

- Release the throttle grip (1) (**Pos.A**), gradually pull the brakes and at the same time shift down in order to decrease the speed, see p. 77 (DEPARTURE AND DRIVE).

Once the speed has decreased, before stopping the vehicle:

- Pull the clutch lever (2) in order to prevent the stopping of the engine.

When the vehicle has come to rest:

- Position the gear lever in neutral (green warning light " . " on).
- Release the clutch lever (2).
- In case of a brief stop, keep at least one brake pulled.

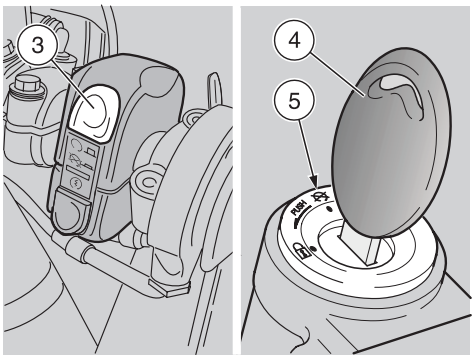

PARKING

It is very important to choose a suitable parking area, respecting the road signs and the indications given below.

⚠ WARNING

Park the vehicle on firm and flat ground, to prevent it from falling down.
Neither lean the vehicle against walls, nor lay it on the ground.
Make sure that the vehicle and especially its red-hot parts do not represent a danger for persons and children. Do not leave the vehicle unattended when the engine is on or the key is inserted into the ignition switch.

Do not get too near the cooling fans even if they are still, since they may start moving and suck clothes edges, hair, etc.

⚠ CAUTION

The fall or excessive inclination of the vehicle may cause the fuel to flow out of the tank.

The fuel used for internal combustion engines is extremely inflammable and in particular conditions it can become explosive.

⚠ WARNING

Do not apply the load of your weight or of the passenger's weight onto the side stand.

To park the vehicle:

- Choose a suitable parking area.
- Stop the vehicle, see p. 81 (STOPPING).
- Move the engine stop switch (3) to position " ! 0 ".
- Rotate the key (4) and move the ignition switch (5) to position " 0 ".

⚠ WARNING

When getting on or off the vehicle, keep to the instructions given, see p. 69 (GETTING ON AND OFF THE VEHICLE).

- Following the indications, wait until the passenger has got off the vehicle before getting off.
- Lock the steering, see p. 48 (STEERING LOCK) and extract the key (4).

⚠ WARNING

Make sure that the vehicle is stable.

Downloaded from www.Manualslib.com manuals search engine

POSITIONING THE VEHICLE ON THE STAND

SIDE STAND

To place the vehicle on the side stand while seated astride the vehicle, see p. 69 (GETTING ON AND OFF THE VEHICLE).

If any manoeuvre (for example, moving the vehicle) required the lifting of the stand, to place the vehicle on the stand again, proceed as follows:

⚠ WARNING

Make sure that the parking surface is free from obstacles, firm and flat.

- Choose a suitable parking area, see p. 81 (PARKING).
- Grasp the left grip (1) and rest your right hand on the rear upper part of the vehicle (2).

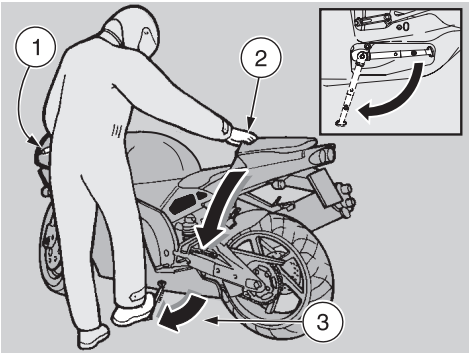

- Press the side stand with your right foot and extend it completely (3).
- Incline the vehicle until the stand rests on the ground.
- Steer the handlebar completely leftwards.

⚠ WARNING

Make sure that the vehicle is stable.

SUGGESTIONS TO PREVENT THEFT

NEVER leave the ignition key inserted and always use the steering lock.

Park the vehicle in a safe place, possibly in a garage or a protected place.

When possible, use an additional anti-theft device.

Make sure that all documents are in order and the road tax has been paid.

Write down your personal data and telephone number in this page, to facilitate the identification of the owner in case of finding after theft.

SURNAME: .....

NAME: .....

ADDRESS: .....

.....

TELEPHONE NO.: .....
Very often stolen vehicles are identified thanks to the data written in the use and maintenance manual.

Downloaded from www.Manualslib.com manuals search engine

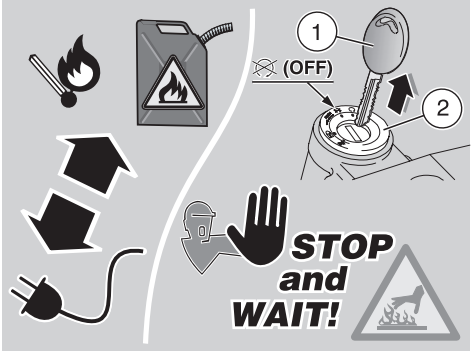

Carefully read p. 2 (FOREWORD) and (INTRODUCTION), p. 3 (SAFETY WARNINGS) and (GENERAL SAFETY RULES), p. 5 (WARNINGS - PRECAUTIONS - GENERAL ADVICE).

⚠ WARNING

Risk of fire.

Keep fuel and other flammable substances away from the electrical components.

Before beginning any maintenance operation or any inspection of the vehicle, stop the engine, remove the key (1) from the ignition switch (2), wait until the engine and the exhaust system have cooled down and if possible lift the vehicle by means of the proper equipment, on firm and flat ground.

Before proceeding, make sure that the room in which you are working is properly ventilated.

Be careful to avoid hot parts of the engine and exhaust system. They are hot enough to cause serious burns.

Avoid the temptation to hold any part of the vehicle in your mouth. The coatings, the platings and the components used are not edible and, in some cases, are noxious or even toxic.

⚠ CAUTION

In general, reassembly is performed in the reverse order of the disassembly instructions given here.

For some maintenance operations, especially those in which your hands are likely to come in contact with coolant, or engine oil, or gasoline, or brake fluid, it is advisable to use thin disposable gloves, such as those made of latex, rubber or nitrile.

The routine maintenance operations described in this manual can usually be performed by the user. However, in some cases, specific tools and technical expertise may be required.

Do not hesitate to contact your local **aprilia Dealer** who has all the latest factory information and tools to properly service your vehicle.

Remember that many service operations, if done improperly, can be very hazardous. If you have any questions about your ability to carry out the operations described here, contact your local **aprilia Dealer**.

In all cases, personally carry out the "preliminary checking operations" after any maintenance, see p. 71 (PRELIMINARY CHECKING OPERATIONS).

⚠ WARNING

Remember that tightening torque of all fasteners on the wheels, brakes, axles, suspension are extremely important to ensure safety, and must be maintained at the prescribed values.

Check the tightening torques of the fasteners regularly, and always use a torque wrench when installing them.

Failure to adhere to this warning could cause the loosening and subsequent loss of critical fasteners, which could cause a wheel to lock or cause other handling problems with consequent overturning, and the risk of serious injury or even death.

⚠ WARNING

Fasteners must be neither overtightened or undertightened. If they are overtightened, the threads may be damaged and the fasteners will be destroyed, whereas if they are undertightened, they can vibrate and become lost.

Downloaded from www.Manualslib.com manuals search engine

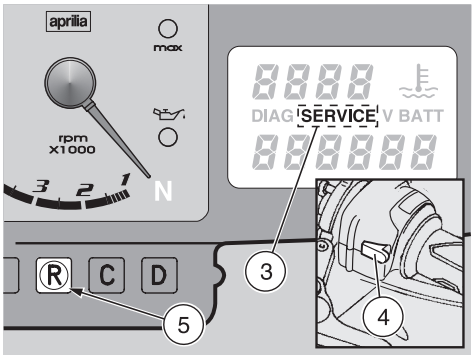

Obviously, under these circumstances, a serious accident with resultant serious injury or death could ensue.

⚠ CAUTION

After the first 600 mi (1,000 km) and thereafter every 4,650 mi (7,500 km), the word "SERVICE" (3) appears on the right display. When this occurs contact your local aprilia Dealer, who will carry out the operations indicated in the regular service intervals chart, see p. 85 (REGULAR SERVICE INTERVALS CHART).
To make the word "SERVICE" disappear, press the "LAP" push button (4), and simultaneously press the push button R (5) and keeping them depressed for about 5 seconds.

Downloaded from www.Manualslib.com manuals search engine

REGULAR SERVICE INTERVALS CHART

OPERATIONS TO BE CARRIED OUT BY THE local aprilia Dealer (WHICH CAN BE CARRIED OUT EVEN BY THE USER).

Key

¡ = check and clean, adjust, lubricate or change, if necessary;

¢ = clean;

£ = change;

¤ = adjust.

NOTE Perform the maintenance operations with half the frequency indicated if the vehicle is used in rainy or dusty areas, on uneven surfaces or on racetracks.

(*) = In case of use on racetracks, change every 2343 mi (3750 km).

(**) = Check every two weeks or according to the intervals indicated.

Component	After running-in (625 mi [1000 km])	Every 4687 mi (7500 km) or 12 months	Every 9375 mi (15000 km) or 24 months
Spark plugs (*)		¡	£
Air cleaner		¡	£
Engine oil filter (*)	£	£	
Engine oil filter (on oil tank)	¢		¢
Fork	¡		¡
Light operation/direction		¡	
Light system	¡	¡	
Safety switches			
Clutch fluid		¡	
Brake fluid		¡	
Coolant			¡
Engine oil	£	£ (*)	
tires	¡	¡	
Tyre pressure (**)	¤	¤	
Engine idling rpm	¤	¤	
Battery terminals tightening	¡		
Engine oil pressure warning light LED	at every start: ¡		
Drive chain tension and lubrication	every 625 mi (1000 km): ¡		
Brake pad wear	¡	before every trip and every 1250 mi (2000 km): ¡	

Downloaded from www.Manualslib.com manuals search engine

OPERATIONS TO BE CARRIED OUT BY THE local aprilia Dealer.

Key

¡ = check and clean, adjust, lubricate or change, if necessary (according to workshop manual specifications);

¢ = clean;

£ = change;

¤ = adjust.

NOTE Perform the maintenance operations with half the frequency indicated if the vehicle is used in rainy or dusty areas, on uneven surfaces or on racetracks.

(*) = In case of use on racetracks, check every 2343 mi (3750 km).

(**) = With "R" fork q (R g), change every 6250 mi (10000 km).

(***) = Only in case of:

- **intense use on racetracks;**
- **participation in competitions.**

Component	After running-in [625 mi (1000 km)]	Every 4687 mi (7500 km) or 12 months	Every 9375 mi (15000 km) or 24 months
Rear shock absorber			¡
Gear (*e)	**every 6,250 mi (10,000 km): ¡**		
Transmission cables and controls	¡	¡	
Rear suspension linkage bearings			¡
Steering bearings and steering clearance	¡	¡	
Wheel bearings		¡	
Brake discs	¡	¡	
General running of the vehicle			
Adjusting the valve clearance	¤		¤
Braking systems	¡	¡	
Cooling system		¡	
Clutch fluid	every 2 years: £		
Brake fluid			
Coolant			
Fork oil (**)	after the first 4687 mi (7500 km) and successively every 14000 mi (22500 km): £		
Fork oil seals R	after the first 18750 mi (30000 km) and successively every 14000 mi (22500 km): £		
Fork oil seals q		¡	
Brake pads	if worn: £		
Wheel/Tyres	¡	¡	
Nut, bolt, screw tightening			
Battery terminals tightening	¡		
Cylinder synchronization	¡	¡	
Suspensions and attitude	¡		¡
Final transmission (chain, crown and pinion)		¡	
Fuel pipes		¡	every 4 years: £
Clutch wear (*)		¡	
Pistons (***)	**every 3125 mi (5000 km): ¡**		

Downloaded from www.Manualslib.com manuals search engine

MAINTENANCE RECORD

Owner Name	
Owner Address	
Owner Telephone Number	
Vehicle Identification Number (V.I.N.) (frame number) see p. 91 (IDENTIFICATION DATA)	
Engine Number see p. 91 (IDENTIFICATION DATA)	
local aprilia **Dealer Name**	
local aprilia **Dealer Address**	
Local aprilia **Dealer Telephone Number**	
Warranty Activation Date **(from Retail Purchase Warranty Activation Form)**	

The following is to help you keep an accurate record of maintenance work.
Information recorded is not considered as proof that maintenance has been carried out.
Keep copies of work orders and/or receipts for parts you purchase.

Date	Odometer reading	Maintenance Performed	Dealer Stamp

to be continued ➤

Downloaded from www.Manualslib.com manuals search engine

continued ➤

Date	Odometer reading	Maintenance Performed	Dealer Stamp

to be continued ➤

Downloaded from www.Manualslib.com manuals search engine

continued ➤

Date	Odometer reading	Maintenance Performed	Dealer Stamp

to be continued ➤

Downloaded from www.Manualslib.com manuals search engine

continued ➤

Date	Odometer reading	Maintenance Performed	Dealer Stamp

to be continued ➤

Downloaded from www.Manualslib.com manuals search engine

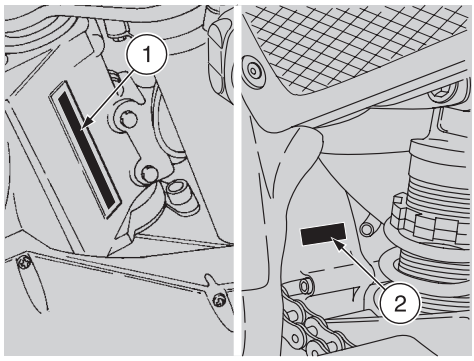

IDENTIFICATION DATA

It is a good rule to write down the frame and engine numbers in the space provided in this manual.

The frame number can be used for the purchase of spare parts.

NOTE Do not alter the identification numbers if you do not want to incur severe penal and administrative sanctions. In particular, the alteration of the frame number results in the immediate invalidity of the guarantee.

FRAME NUMBER

The frame number (1) is stamped on the right side of the steering column.

Frame no. _____

ENGINE NUMBER

The engine number (2) is stamped on the rear part of the engine, near the front sprocket.

Engine no. _____

JOINTS WITH CLICK CLAMPS AND WITH SCREW CLAMPS

⚠ CAUTION

Remove ONLY the clamps indicated in the maintenance procedures.
This text is not to be intended as an authorization to arbitrarily remove the clamps present on the vehicle.

⚠ WARNING

Before removing a clamp, make sure that the removal does not involve any fluid leakage; if so, provide for preventing such leakages and protect the components positioned near the joint.

CLICK CLAMPS

For the removal it is sufficient to use simple pliers, while for the installation it is necessary to use a special tool (see below).

Before removing a clamp, prepare the material necessary for the correct reassembly.

NOTE Have the appropriate special tool g to hand:

– clamp installation pliers, see p. 52 (SPECIAL TOOLS g).

⚠ CAUTION

Upon installation, replace the click clamp that has been removed with a new one having the same dimensions, to be requested to your local aprilia Dealer.
Do not attempt to reinstall the removed click clamp, since it is unusable.
Do not replace the removed click clamp with a screw clamp or with other types of clamp.

⚠ CAUTION

Proceed with care, in order not to damage the joint components.

◆ Work with the pliers on the head of the click clamp, forcing until you release it.

SCREW CLAMPS

For the removal and installation it is sufficient to use a simple screwdriver.

⚠ CAUTION

Check the conditions of the clamp and if necessary replace it with a new one of the same type and dimensions, to be requested to your local aprilia Dealer.

When fastening the clamp, make sure that the joint is sufficiently stable.

CHECKING THE ENGINE OIL LEVEL AND TOPPING UP

Carefully read p. 66 (ENGINE OIL) and p. 83 (MAINTENANCE).

NOTE Perform the maintenance operations with half the frequency indicated if the vehicle is used in rainy or dusty areas, on uneven surfaces or on racetracks.

Periodically check the engine oil level, change the oil after the first 625 mi (1000 km) and successively every 4687 mi (7500 km), see p. 93 (CHANGING THE ENGINE OIL FILTER).

Downloaded from www.Manualslib.com manuals search engine

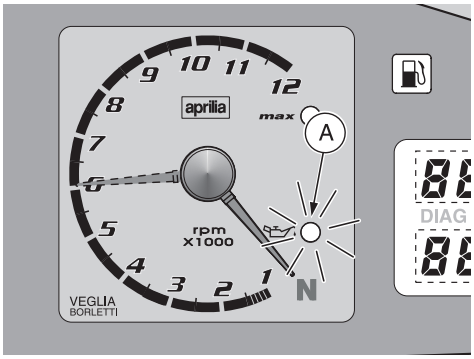

⚠ CAUTION

In case of use on racetracks, change the engine oil every 2343 mi (3750 km). If the vehicle is used in dusty areas, change the oil more frequently.

For the check, proceed as follows:

⚠ CAUTION

The engine oil level must be checked with warm engine.
If the check is carried out with cold engine, the oil level may temporarily get below the "MIN" mark.
This is not a problem, provided that the engine oil pressure warning light LED " - " (A) does not come on, see p. 38 (INSTRUMENTS AND INDICATORS TABLE).

NOTE To warm the engine up and have the engine oil reach the operating temperature, do not let the engine idle with the vehicle at rest. According to the correct procedure, it is advisable to carry out the check after a trip or after covering approximately 10 mi (15 km) on a road outside town (this is sufficient for the engine oil to reach the operating temperature).

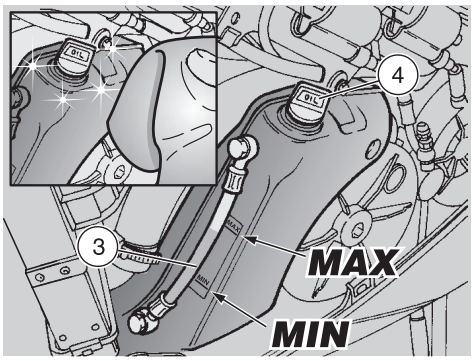

◆ Stop the engine, see p. 81 (STOPPING).
◆ Keep the vehicle in vertical position, with the two wheels resting on the ground.
◆ Check the oil level in the sight glass (3).

MAX = maximum level

MIN = minimum level.

The difference between "**MAX**" and "**MIN**" amounts to approximately 500 cu. cm.

◆ The level is correct when the oil almost reaches the "**MAX**" mark.

⚠ CAUTION

Never exceed the "MAX" mark, nor leave the oil below the "MIN" mark, in order to avoid serious damage to the engine.

If necessary, top up the engine oil by proceeding as follows:

◆ Remove the left side fairing, see p. 107 (REMOVING THE SIDE FAIRINGS).
◆ Unscrew and remove the filling cap (4).

⚠ CAUTION

Do not put additives or other substances into the oil.

If you use a funnel or other similar items, make sure that they are perfectly clean.

NOTE Use high-quality 15W – 50 oil, see p. 144 (LUBRICANT CHART).

◆ Top up the tank and restore the correct level, see p. 144 (LUBRICANT CHART).

Downloaded from www.Manualslib.com manuals search engine

CHANGING THE ENGINE OIL AND THE OIL FILTER

⚠ CAUTION

The engine oil and the oil filter change operations may be difficult for unskilled operators.
If necessary, contact your aprilia Official Dealer.
If you want to perform these operations personally, keep to the following instructions.

Carefully read p. 66 (ENGINE OIL) and p. 83 (MAINTENANCE).

NOTE Perform the maintenance operations with half the frequency indicated if the vehicle is used in rainy or dusty areas, on uneven surfaces or on racetracks.

Periodically check the engine oil level, see p. 91 (CHECKING THE ENGINE OIL LEVEL AND TOPPING UP) change the oil after the first 625 mi (1000 km) and successively every 4687 mi (7500 km).

⚠ CAUTION

In case of use on racetracks, change the engine oil every 2343 mi (3750 km).
If the vehicle is used in dusty areas, change the oil more frequently.

To change, proceed as follows:

NOTE The oil flows out completely and without problems when it is warm and therefore more fluid: to achieve this condition, the engine should run for approximately twenty minutes.

⚠ CAUTION

When warmed up, the engine contains hot oil; therefore, while carrying out the operations described here below be particularly careful, in order to avoid burns.

- Remove the lower fairing, see p. 107 (REMOVING THE LOWER FAIRING).
- Position a container (1) with more than 4000 cu. cm. capacity in correspondence with the drain plug (2) positioned on the tank.
- Unscrew and remove the drain plug (2) positioned on the tank.
- Unscrew and remove the filling cap (3).
- Drain the oil and let it drip into the container (1) for a few minutes.
- Check and if necessary replace the sealing washer of the drain plug (2) positioned on the tank.
- Screw and tighten the drain plug (2) on the tank.

Drain plug (2) driving torque: 15 Nm (1.5 kgm).

- Move the container (1) and position it under the engine base, in correspondence with the drain plug positioned on the engine (4).
- Unscrew and remove the drain plug positioned on the engine (4).
- Drain the oil and let it drip into the container (1) for a few minutes.

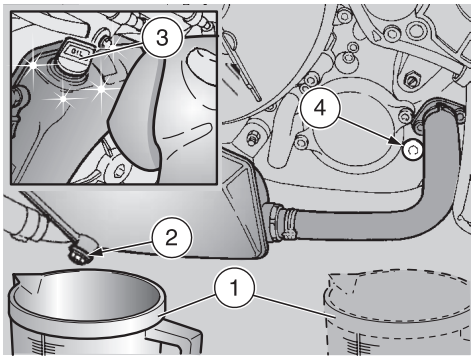

⚠ CAUTION

Do not dispose of oil in the environment. Put it in a sealed container and take it to the filling station where you usually buy it or to an oil salvage center.

- Remove the metal residues from the drain plug (4) magnet.
- Screw and tighten the drain plug (4).

Driving torque of the drain plug (4) positioned on the engine: 8.679 Ftlb (12 Nm).

CHANGING THE ENGINE OIL FILTER

NOTE Perform the maintenance operations with half the frequency indicated if the vehicle is used in rainy or dusty areas, on uneven surfaces or on racetracks.

Change the engine oil filter after the first 625 mi (1000 km) and successively every 4687 mi (7500 km) (or every time you change the oil).

Downloaded from www.Manualslib.com manuals search engine

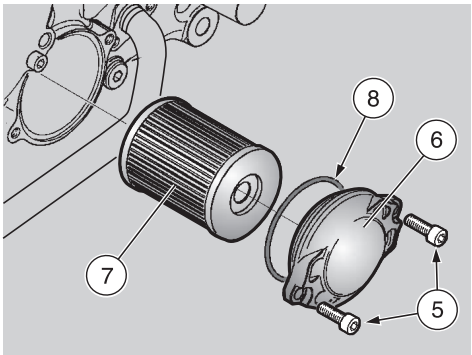

◆ Unscrew the two screws (5) and remove the cover (6).
◆ Remove the engine oil filter (7).

⚠ CAUTION

Do not use filters that have already been used.

◆ Spread an oil film on the sealing ring (8) of the new engine oil filter.
◆ Fit the new engine oil filter.
◆ Put back the cover (6), screw and tighten the two screws (5).

CLEANING THE ENGINE OIL FILTER ON THE TANK

NOTE Perform the maintenance operations with half the frequency indicated if the vehicle is used in rainy or dusty areas, on uneven surfaces or on racetracks.

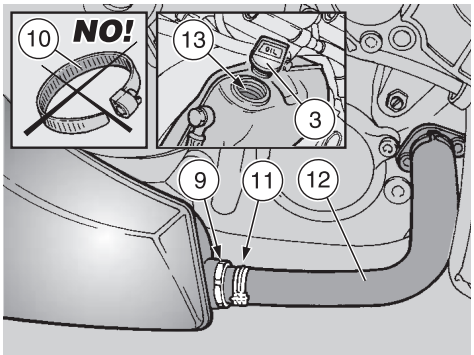

Clean the engine oil filter (9) on the tank after the first 625 mi (1000 km) and successively every 9375 mi (15000 km) (or every two engine oil changes).

NOTE Have the appropriate special tool g to hand:

– clamp installation pliers, see p. 52 (SPECIAL TOOLS g).

⚠ CAUTION

Upon installation, replace the click clamp that has been removed with a new one having the same dimensions, to be requested to an aprilia Official Dealer.
Do not attempt to reinstall the removed click clamp, since it is unusable.
Do not replace the removed click clamp with a screw clamp (10) or with other types of clamp.

◆ Release the click clamp (11).
◆ Disconnect the pipe (12).
◆ Unscrew and remove the engine oil filter (9) positioned on the tank and clean it with a jet of compressed air.
◆ Check the seal of the engine oil filter (9) positioned on the tank; screw and tighten it.

Engine oil filter (9) driving torque: 30 Nm (3 kgm).

◆ Connect the pipe (12) and tighten the new click clamp (10).

⚠ CAUTION

Do not put additives or other substances into the oil.
If you use a funnel or other similar items, make sure that they are perfectly clean.

NOTE Use high-quality 15W – 50 oil, see p. 144 (LUBRICANT CHART).

◆ Pour about 3500 cu. cm. of engine oil through the filling opening (13), see p. 144 (LUBRICANT CHART).
◆ Tighten the filling cap (3).
◆ Start the engine, see p. 74 (STARTING) and let it idle for about one minute, in order to ensure the filling up of the engine oil circuit.
◆ Check the oil level and top up if necessary, see p. 91 (CHECKING THE ENGINE OIL LEVEL AND TOPPING UP).

Downloaded from www.Manualslib.com manuals search engine

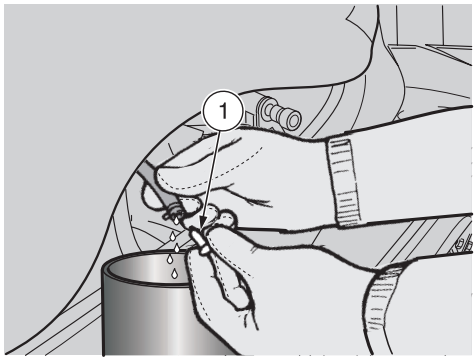

AIR CLEANER

NOTE Perform the maintenance operations with half the frequency indicated if the vehicle is used in rainy or dusty areas, on uneven surfaces or on racetracks.

Check the air cleaner every 4687 mi (7500 km) or 12 months, change it every 9375 mi (15000 km) or more frequently if the vehicle is used on dusty or wet roads.

It is possible to clean the air cleaner partially after using the vehicle on this kind of roads.

⚠ CAUTION

The partial cleaning of the filter does not exclude or postpone the replacement of the filter itself. Do not start the engine if the air cleaner has been removed. Do not clean the filtering element with petrol or solvents, since they may cause a fire in the fuel supply system, with serious danger for the persons in the vicinity and for the vehicle.

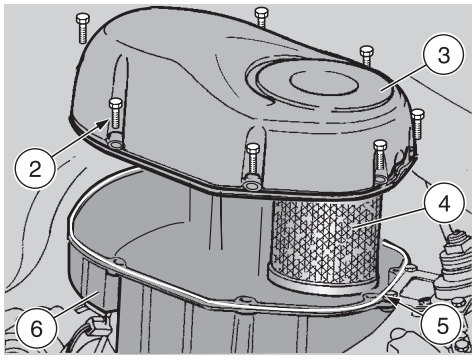

DO NOT DISPOSE OF POLLUTING SUBSTANCES OR COMPONENTS IN THE ENVIRONMENT.

- Every 4687 mi (7500 km), remove the plug (1), empty its content into a container and deliver it to a salvage center.

REMOVAL

- Lift the fuel tank, see p. 106 (LIFTING THE FUEL TANK)
- Unscrew and remove the seven screws (2) that fasten the filter case cover (3).
- Remove the filter case cover (3).
- Extract the air cleaner (4).
- Check the conditions of the gasket (5) and change it if it is damaged.

⚠ CAUTION

Plug the opening with a clean cloth, in order to prevent any foreign matter to get ito the suction ducts.

Upon reassembly, before positioning the filter case cover (3), make sure that you have not left the cloth or other objects inside the filter case (6).

Make sure that the filtering element is positioned correctly, in such a way as to prevent non-filtered air from entering.

Remember that the untimely wear of the piston segments and the cylinder may be caused by a faulty or uncorrectly positioned filtering element.

PARTIAL CLEANING

⚠ CAUTION

Do not press or strike the metal net of the air cleaner (4).
Do not use screwdrivers or alike.

- Seize the air cleaner (4) vertically and strike it more than once on a clean surface.
- If necessary, clean the air cleaner (4) with a compressed air jet (directing it from the inside towards the outside of the filter).

⚠ CAUTION

When cleaning the filtering element, make sure that there are no tears.

Otherwise, change the filtering element.

- Clean the outer part of the air cleaner (4) with a clean cloth.

Downloaded from www.Manualslib.com manuals search engine

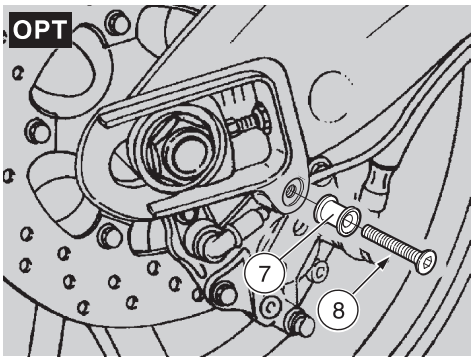

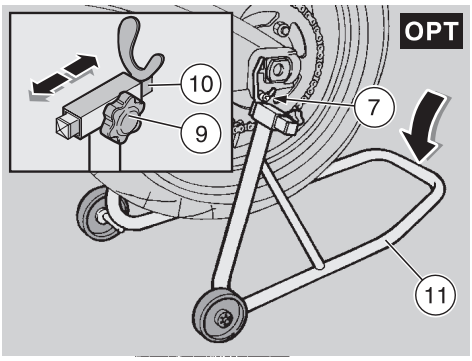

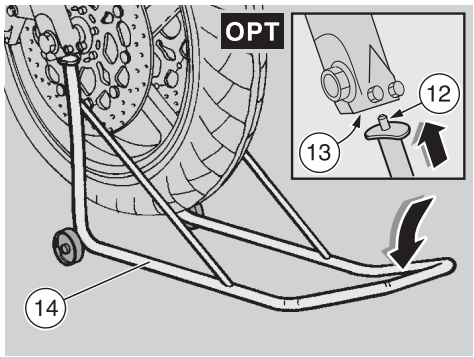

CHANGING

⚠ CAUTION

Do not use filters that have already been used.

◆ Replace the air cleaner (4) with a new one of the same type.

ASSEMBLING THE PINS FOR THE REAR SERVICE STAND g

◆ Position the vehicle on the stand, see p. 82 (POSITIONING THE VEHICLE ON THE STAND).

x Position the pin (7) on the appropriate seat on the rear swinging arm.

x Screw and tighten the screw (8) in the appropriate threaded hole in the rear swinging arm.

POSITIONING THE VEHICLE ON THE REAR SERVICE STAND g

◆ Assemble the two pins (7), see p. 96 (ASSEMBLING THE PINS FOR THE REAR SERVICE STAND g).

NOTE Have someone help you keep the vehicle in vertical position with the two wheels on the ground.

x Loosen the knob (9).

x Move the fork support (10), positioning it so that the width corresponds to the distance between the two pins (7) on the rear swinging arm.

x Tighten the knob (9).

◆ At the same time introduce the two fork-shaped seats (10) of the stand (11) under the two pins (7) provided on the vehicle.

◆ Rest one foot on the rear part of the stand (11).

◆ Push the stand (11) downwards until it reaches the end of its stroke.

⚠ CAUTION

Make sure that the vehicle is stable.

POSITIONING THE VEHICLE ON THE FRONT SERVICE STAND g

◆ Position the vehicle on the appropriate rear service stand, see p. 96 (ASSEMBLING THE PINS FOR THE REAR SERVICE STAND g).

◆ Insert the two ends of the stand (12) in the two holes (13) positioned on the lower ends of the front fork.

◆ Rest one foot on the front part of the stand (14).

◆ Push the stand (14) downwards until it reaches the end of its stroke.

⚠ CAUTION

Make sure that the vehicle is stable.

Downloaded from www.Manualslib.com manuals search engine

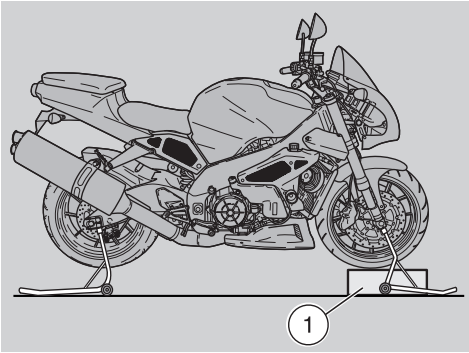

FRONT WHEEL

⚠ CAUTION

The disassembly and reassembly of the front wheel may be difficult for unskilled operators.

If necessary, contact your aprilia Official Dealer.

If you want to perform these operations personally, keep to the following instructions.

Carefully read p. 83 (MAINTENANCE).

While disassembling and reassembling the wheel, be careful not to damage the brake lines, the discs and the pads.

⚠ WARNING

Riding with damaged rims may be dangerous for the rider, other persons and the vehicle.

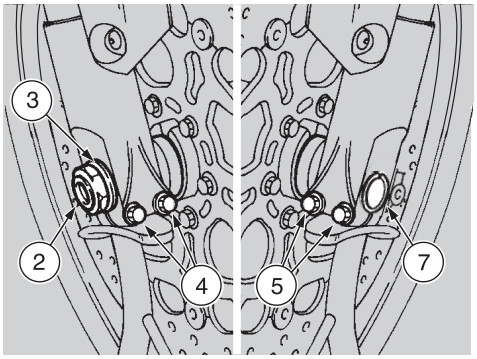

Check the conditions of the wheel rim and change it if it is damaged.

DISASSEMBLY

- Remove the front brake calipers, see p. 99 (FRONT BRAKE CALIPERS R).
- Put a support (1) under the tire, in such a way as to keep the wheel in its position after loosening it.

⚠ CAUTION

Make sure that the vehicle is stable.

- Have someone keep the handlebar steady in running position, so that the steering is locked.

Wheel nut (2) driving torque: 57.859 Ftlb (80 Nm).

- Loosen and remove the wheel nut (2), taking the washer (3).

Wheel shaft clamp screw driving torque: 8.679 Ftlb (12 Nm).

- Partially unscrew the two wheel shaft clamp screws (4) (right side).
- Partially unscrew the two wheel shaft clamp screws (5) (left side).

NOTE Check the position of the spacer (6) (right side), in order to be able to reinstall it correctly.

NOTE To facilitate the extraction of the wheel shaft, slightly raise the wheel.

- Push the wheel shaft (7), by carefully acting on the threaded end and using a rubber hammer if necessary.
- Support the front wheel and manually withdraw the wheel shaft (7).
- Remove the wheel by withdrawing it from the front.

⚠ CAUTION

The spacer (6) remains in its seat on the wheel; if it comes off, reposition it correctly (see REASSEMBLY).

REASSEMBLY

- Spread a film of lubricating grease on the whole length of the wheel shaft (7), see p. 144 (LUBRICANT CHART).

⚠ CAUTION

While reassembling the wheel, be careful not to damage the brake lines, discs and pads.

Downloaded from www.Manualslib.com manuals search engine

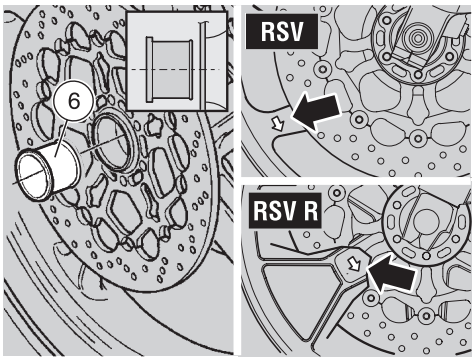

NOTE Carry out following operation only if spacer (6) came off its seat.

◆ Insert the spacer ring (6) with its longer diameter towards the outside of the vehicle.

⚠ CAUTION

The arrow on the wheel side indicates the rotation direction.
Upon reassembly, make sure that the wheel is positioned correctly: the arrow must be visible on the left side of the vehicle.

◆ Position the wheel between the fork legs on the support (1).

⚠ WARNING

Danger of injury. Do not introduce your fingers to align the holes.

◆ Move the wheel until its central hole and the holes on the fork are aligned.

◆ Introduce the wheel shaft (7) completely from the left side.

NOTE Make sure that the wheel shaft (7) is completely inserted.

◆ Position the washer (3) and tighten the wheel nut (2) manually.

NOTE In this phase, for the temporary tightening of the two wheel shaft clamp screws (5) (left side), the driving torque value need not be respected.

◆ Screw the two wheel shaft clamp screws (5) (left side) and tighten them as much as necessary to lock the rotation of the wheel shaft (7).
◆ Tighten the wheel nut (2) completely.

Wheel nut (2) driving torque: 57.859 Ftlb (80 Nm).

◆ Tighten the two wheel shaft clamp screws (4) (right side).

Wheel shaft clamp screw driving torque: 8.679 Ftlb (12 Nm).

◆ Loosen the two wheel shaft clamp screws (5) (left side).
◆ Put back the front brake calipers, see p. 99 (FRONT BRAKE CALIPERS R).
◆ With pulled front brake lever, press the handlebar repeatedly, thrusting the fork downwards. In this way the fork legs will settle properly.

◆ Position the vehicle on the side stand, see p. 82 (POSITIONING THE VEHICLE ON THE STAND).
◆ Tighten the two screws (5) of the wheel shaft clamp (left side).

Wheel shaft clamp screw driving torque (5): 8.679 Ftlb (12 Nm).

◆ Make sure that the following components are not dirty:
– tire;
– wheel;
– brake discs.

⚠ WARNING

After reassembly, pull the front brake lever repeatedly and check the correct functioning of the braking system.

Have the driving torques, centering and balancing of the wheel checked by your aprilia Official Dealer, in order to avoid accidents that may be harmful for you and/or other people.

Downloaded from www.Manualslib.com manuals search engine

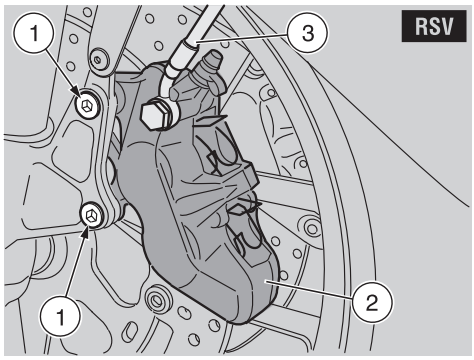

FRONT BRAKE CALIPERS R

Carefully read p. 83 (MAINTENANCE).

⚠ WARNING

A dirty disc soils the pads, with consequent reduction of the braking efficiency. Dirty pads must be replaced, while dirty discs must be cleaned with a high-quality degreaser.

⚠ CAUTION

While disassembling and reassembling the wheel, be careful not to damage the brake lines, the discs and the pads.

NOTE To remove the front brake calipers, it is necessary to use the appropriate front g and rear service stands g .

DISASSEMBLY

◆ Position the vehicle on the appropriate front service stand, see p. 96 (POSITIONING THE VEHICLE ON THE FRONT SERVICE STAND g).

⚠ CAUTION

Make sure that the vehicle is stable.

◆ Manually rotate the wheel, so that the space between two spokes of the rim is in correspondence with the brake caliper.

◆ Have someone keep the handlebar steady in running position, so that the steering is locked.

Brake caliper screw driving torque (1): 50 Nm (5 kgm).

◆ ∗ Unscrew and remove the two brake caliper screws (1).

⚠ CAUTION

Never pull the brake lever after removing the caliper, otherwise the pistons may go out of their seats, thus causing the outflow of the brake fluid. In this case consult your aprilia Official Dealer, who will carry out the proper maintenance operation.

◆ ∗ Withdraw the brake caliper (2) from the disc, leaving it attached to the pipe (3).

Work on the second brake caliper:

◆ Repeat the operations marked with ∗.

REASSEMBLY

⚠ CAUTION

Proceed with care, in order not to damage the brake pads.

◆ ✖ Insert the brake caliper (2) on the disc and position it so that its fastening holes and the holes on the support are aligned.

⚠ WARNING

Upon reassembly of the brake caliper, replace the caliper fastening screws (1) with two new screws of the same type.

◆ ✖ Screw and tighten the two screws (1) that fasten the brake caliper.

Brake caliper screw driving torque: 36.132 Ftlb (50 Nm).

Work on the second brake caliper:

◆ Repeat the operations marked with ✖.

◆ Remove the front service stand g , see p. 96 (POSITIONING THE VEHICLE ON THE FRONT SERVICE STAND g).

After reassembly, pull the brake lever repeatedly and check the correct functioning of the braking system.

Downloaded from www.Manualslib.com manuals search engine

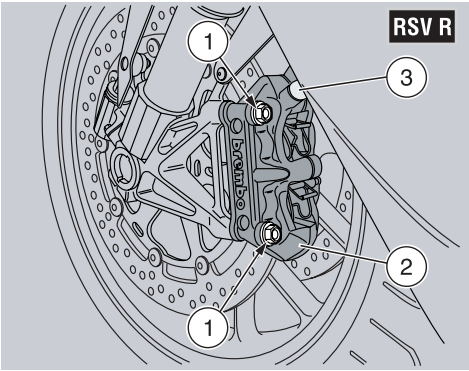

FRONT BRAKE CALIPERS q

Carefully read p. 83 (MAINTENANCE).

⚠ WARNING

A dirty disc soils the pads, with consequent reduction of the braking efficiency. Dirty pads must be replaced, while dirty discs must be cleaned with a high-quality degreaser.

⚠ CAUTION

While disassembling and reassembling the wheel, be careful not to damage the brake lines, the discs and the pads.

NOTE To remove the front brake calipers, it is necessary to use the appropriate front g and rear service stands g .

DISASSEMBLY

◆ Position the vehicle on the appropriate front service stand, see p. 96 (POSITIONING THE VEHICLE ON THE FRONT SERVICE STAND g).

⚠ CAUTION

Make sure that the vehicle is stable.

◆ Manually rotate the wheel, so that the space between two spokes of the rim is in correspondence with the brake caliper.

◆ Have someone keep the handlebar steady in running position, so that the steering is locked.

Brake caliper screw driving torque (1): 50 Nm (5 kgm).

◆ ✱ Unscrew and remove the two brake caliper screws (1).

⚠ CAUTION

Never pull the brake lever after removing the caliper, otherwise the pistons may go out of their seats, thus causing the outflow of the brake fluid. In this case consult your aprilia Official Dealer, who will carry out the proper maintenance operation.

◆ ✱ Withdraw the brake caliper (2) from the disc, leaving it attached to the pipe (3).

Work on the second brake caliper:

◆ Repeat the operations marked with ✱.

REASSEMBLY

⚠ CAUTION

Proceed with care, in order not to damage the brake pads.

◆ ✖ Insert the brake caliper (2) on the disc and position it so that its fastening holes and the holes on the support are aligned.

⚠ WARNING

Upon reassembly of the brake caliper, replace the caliper fastening screws (1) with two new screws of the same type.

◆ ✖ Screw and tighten the two screws (1) that fasten the brake caliper.

◆ ✖ Pull brake lever to allow the caliper to settle onto the disc.

◆ ✖ Keep brake lever pulled and tighten the 2 screws (1) to the specified torque.

Brake caliper screw driving torque: 36.132 Ftlb (50 Nm).

Work on the second brake caliper:

◆ Repeat the operations marked with ✖.

◆ Remove the front service stand g , see p. 96 (POSITIONING THE VEHICLE ON THE FRONT SERVICE STAND g).

After reassembly, pull the brake lever repeatedly and check the correct functioning of the braking system.

Downloaded from www.Manualslib.com manuals search engine

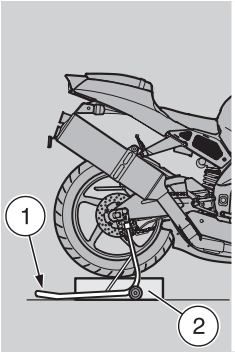

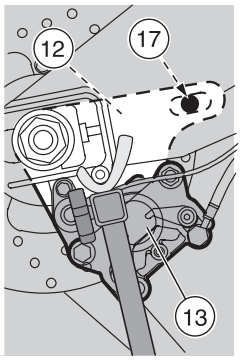

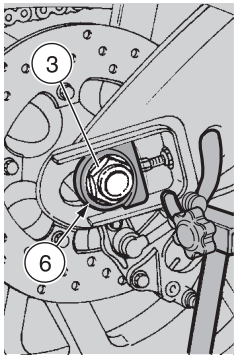

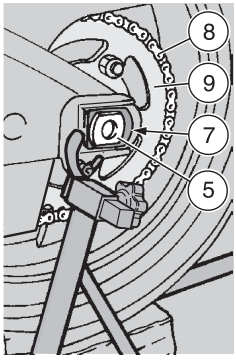

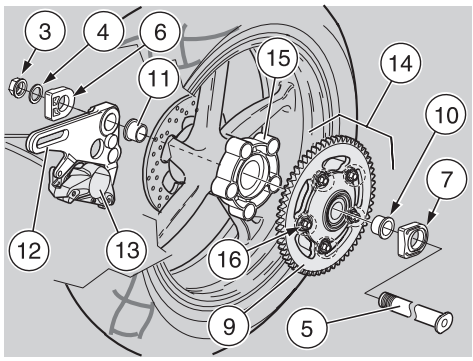

REAR WHEEL

⚠ CAUTION

The disassembly and reassembly of the rear wheel may be difficult for unskilled operators.

If necessary, contact your aprilia Official Dealer.

If you want to perform these operations personally, keep to the following instructions.

Carefully read p. 83 (MAINTENANCE).

Before carrying out the following operations, let the engine and the silencer cool down until they reach room temperature, in order to avoid burns.

While disassembling and reassembling the wheel, be careful not to damage the brake pipe, the disc and the pads.

⚠ WARNING

Riding with damaged rims may be dangerous for the rider, other persons and the vehicle.

Check the conditions of the wheel rim and change it if it is damaged.

NOTE To remove the rear wheel it is necessary to use the appropriate rear service stand g .

DISASSEMBLY

- Position the vehicle on the appropriate rear support stand (1), see p. 96 (POSITIONING THE VEHICLE ON THE REAR SERVICE STAND g).
- Put a support (2) under the tire, in such a way as to keep the wheel in its position after loosening it.

Wheel nut (3) driving torque: 86.789 Ftlb (120 Nm) .

- Loosen and remove the wheel nut (3), taking the washer (4).

NOTE To facilitate the extraction of the wheel shaft, slightly raise the wheel.

- Withdraw the wheel shaft (5) from the left side.

NOTE Check the arrangement of the right (6) and left (7) chain tensioners, in order to be able to reassemble them correctly.

- Take the right (6) and left (7) chain tensioners.

NOTE Lower the drive chain (8) outside the rear sprocket (9).

- Make the wheel advance and release the drive chain (8) from the rear sprocket (9).
- Withdraw the wheel from the rear swinging arm from behind, carefully withdrawing the disc from the brake caliper.

Downloaded from www.Manualslib.com manuals search engine

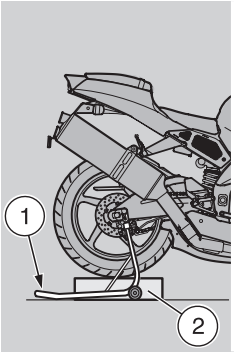

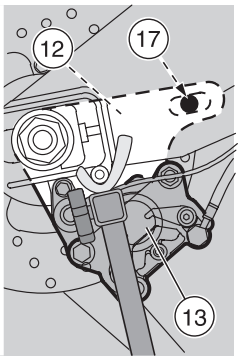

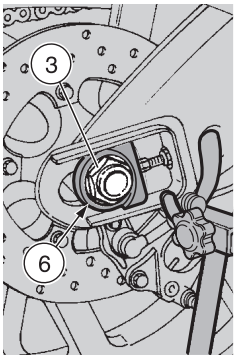

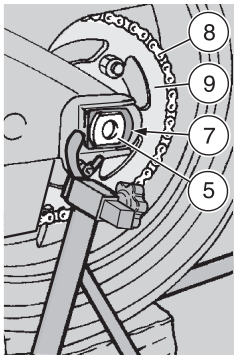

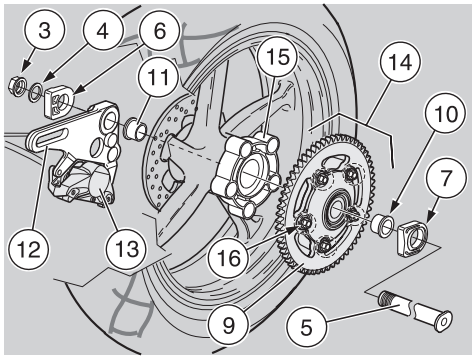

⚠ CAUTION

Do not operate the rear brake lever after removing the wheel, since the pistons may go out of their seats and cause brake fluid leakages. In this case consult your aprilia Official Dealer, who will carry out the proper maintenance operation.

⚠ CAUTION

The left (10) and right spacers (11) remain positioned in the respective seats on the wheel; if they should come off, reposition them correctly (see REASSEMBLY).

NOTE The support plate (12) of the brake caliper (13) remains positioned on the right side of the rear swinging arm.

Proceed with care. If the final drive unit (14) is installed on the cush drive rubbers mount (15), do not overturn or rotate the rear wheel in horizontal position on the rear sprocket side (A), since the final drive unit would come off and fall down, with the risk of damaging the rear sprocket (9).

NOTE The removal of the final drive unit is not necessary if the wheel is in the normal running position (vertical) or in horizontal position with the rear sprocket facing upwards and in both cases secured against overturning.

NOTE Do not unscrew the five nuts (16). The whole final drive unit must be withdrawn from the cush drive rubbers mount.

◆ Working (B) with both hands on the outer diameter of the sprocket (9), withdraw the final drive unit parallely to the wheel axis.

REASSEMBLY

If the final drive unit (14) has been removed:

NOTE Introduce the final drive unit, parallel to the wheel axis, inserting the cush drive rubbers corresponding seats on the mount (15).

◆ Working (C) with both hands on the outer diameter of the sprocket (9), insert the final drive unit in the cush drive rubbers mount (15).

NOTE Perform the operation described below only if the left (10) and/or the right spacer (11) have come off their seats.

◆ Insert the left (10) and/or the right spacer (11) in the respective seats, with the larger diameter towards the outside of the vehicle.

Downloaded from www.Manualslib.com manuals search engine

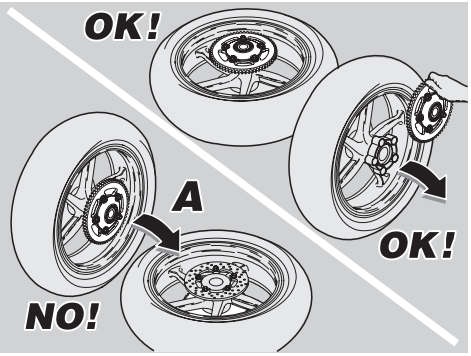

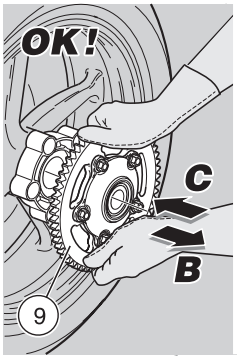

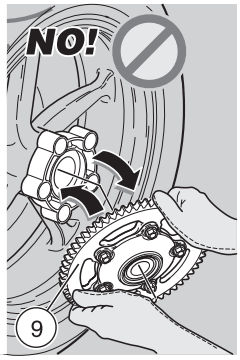

⚠ CAUTION

Before proceeding with the reassembly, make sure that support plate (12) of the brake caliper (13) is positioned correctly; the plate slot must be inserted in the appropriate stop pin (17) in the inner part of the rear swinging arm right section.
Insert the disc in the brake caliper carefully.

- Position the wheel between the rear swinging arm sections on the support (2).

⚠ WARNING

Do not introduce your fingers between the chain and the rear sprocket.

- Make the wheel advance and position the drive chain (8) on the crown gear (9).
- Correctly insert the right (6) and left (7) chain tensioners in their seats on the swinging arm.
- Evenly apply a moderate quantity of grease on the wheel shaft (5), see p. 144 (LUBRICANT CHART).

⚠ WARNING

Danger of injury.
Do not introduce your fingers to align the holes.

- Move the wheel backwards, until its central hole and the holes on the rear swinging arm are aligned.
- Rotate the support plate (12), complete with brake caliper (13) and with fulcrum on the stop pin (17), until it is aligned with the holes.
- Introduce the wheel shaft (5) completely from the left side.

NOTE Make sure that the wheel shaft (5) is completely inserted, with the head in the relevant seat on the left chain tensioner (7).

- Position the washer and tighten the wheel nut (3) manually.
- Check the chain tension, see p. 104 (DRIVE CHAIN).
- Tighten the wheel nut (3).

Wheel nut (3) driving torque: 86.789 Ftlb (120 Nm) .

- Make sure that the following components are not dirty:
  – tire;
  – wheel;
  – brake disc.

⚠ CAUTION

After reassembly, pull the rear brake lever repeatedly and check the correct functioning of the braking system.

Have the driving torques, centering and balancing of the wheel checked by your aprilia Official Dealer, in order to avoid accidents that may be harmful for you and/or other people.

Downloaded from www.Manualslib.com manuals search engine

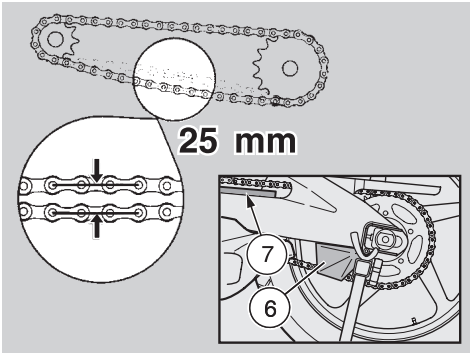

DRIVE CHAIN

Carefully read p. 83 (MAINTENANCE).

The vehicle is equipped with an endless chain, in which a connecting link is not used.

⚠ CAUTION

An excessive slackening of the chain may cause noise or make the chain rattle, with consequent wear of the shoe and of the chain guide plate.

Periodically check the slack and adjust it if necessary, see p. 104 (ADJUSTMENT).

To change the chain, contact an aprilia Official Dealer, who will ensure you prompt and accurate servicing.

Incorrect maintenance may cause the untimely wear of the chain and/or damages to the front and/or rear sprocket.

NOTE Perform the maintenance operations with half the frequency indicated if the vehicle is used in rainy or dusty areas, on uneven surfaces or on racetracks.

CHECKING THE SLACK

To check the slack, proceed as follows:

- Stop the engine.
- Position the vehicle on the stand, see p. 82 (POSITIONING THE VEHICLE ON THE STAND).
- Position the shifting lever in neutral.
- Make sure that the vertical oscillation, in an intermediate point between front and rear sprocket in the lower part of the chain, is about **25 mm**.
- Move the vehicle forwards, or turn the wheel, in order to be able to check the vertical oscillation of the chain even when the wheel turns; the slack must be constant in all the rotation phases of the wheel.

⚠ CAUTION

If in some positions the slack is higher than in others, this means that there are crushed or seized links; in this case, contact an aprilia Official Dealer. To prevent the risk of seizures, lubricate the chain frequently, see p. 105 (CLEANING AND LUBRICATION).

If the slack is constant, but higher or lower than **25 mm**, adjust it, see p. 104 (ADJUSTMENT).

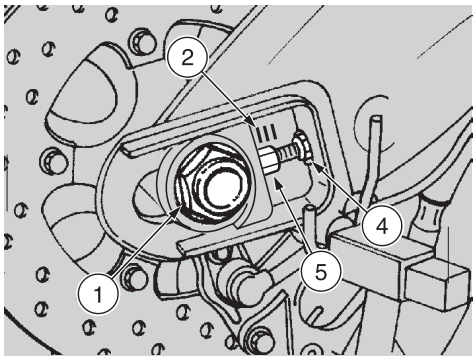

ADJUSTMENT

NOTE To adjust the chain it is necessary to use the appropriate rear service stand g .

If after the check it is necessary to adjust the chain tension, proceed as follows:

- Position the vehicle on the appropriate rear service stand, see p. 96 (POSITIONING THE VEHICLE ON THE REAR SERVICE STAND g).
- Loosen the nut (1) completely.

NOTE For the wheel centering, fixed reference marks (2-3) are provided, which can be seen inside the chain tensioner seats on the rear swinging arm sections, before the wheel shaft.

- Loosen the two lock nuts (4).
- Act on the adjusters (5) and adjust the chain slack, making sure that the reference marks (2-3) are correctly positioned on both sides of the vehicle.

Downloaded from www.Manualslib.com manuals search engine

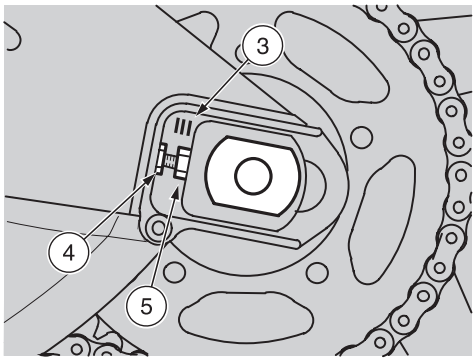

◆ Tighten the two lock nuts (4).
◆ Tighten the nut (1).

Wheel nut (1) driving torque: 86.789 Ftlb (120 Nm) .

◆ Check the chain slack, see p. 104 (CHECKING THE SLACK).

CHECKING THE DRIVING CHAIN, FRONT AND REAR SPROCKET WEAR

Further, check the following parts every 4687 mi (7500 km) and make sure that chain, front and rear sprockets do not show:

– damaged rollers;
– loose pins;
– dry, rusty, crushed or seized links;
– excessive wear;
– lacking O-rings;
– front or rear sprocket teeth excessively worn or damaged.

⚠ CAUTION

If the chain rollers are damaged, the pins are loose and/or the O-rings are damaged or lacking, it is necessary to change the whole chain unit (both sprockets and chain).
Lubricate the chain frequently, especially if there are dry or rusty parts.
The crushed or seized links must be lubricated and made work again.
If this is not possible, contact an aprilia Official Dealer, who will provide for changing the chain.

◆ Check the wear of the chain plastic guide (6).
◆ Finally, check the wear of the rear swinging arm protection shoe (7).

CLEANING AND LUBRICATION

⚠ CAUTION

The drive chain is provided with O-rings among the links, in order to keep the grease inside them.
Carry out the adjustment, lubrication, cleaning and change of the chain with great care.

Never wash the chain with water jets, steam jets, high-pressure water jets and highly inflammable solvents.

◆ Wash the chain with diesel oil or kerosene. If it tends to rust quickly, intensify the maintenance intervals.

Lubricate the chain every 625 mi (1000 km) or whenever necessary.

◆ After washing the chain and letting it dry, lubricate it with spray grease for chains provided with sealing rings, see p. 144 (LUBRICANT CHART).

⚠ CAUTION

The lubricants for chains available on the market may contain substances that are dangerous for the rubber sealing rings of the chain.

NOTE Do not use the vehicle soon after lubricating the chain, since due to the centrifugal force the lubricant would be sprayed outwards and dirty the surrounding areas.

Downloaded from www.Manualslib.com manuals search engine

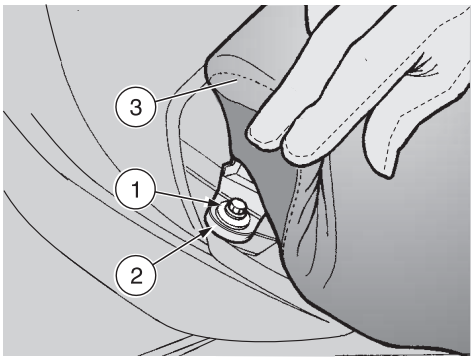

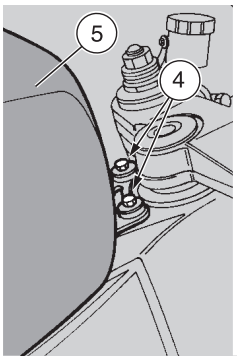

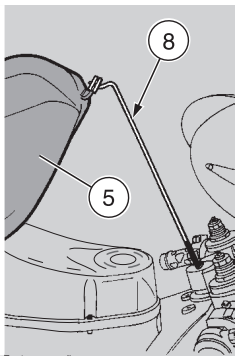

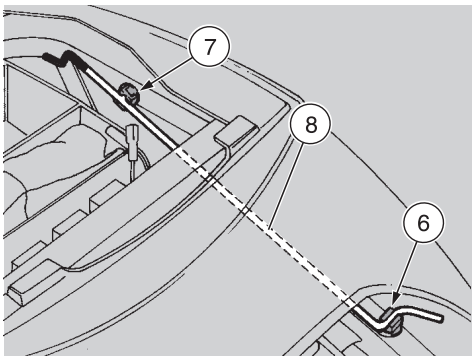

REMOVING THE RIDER SEAT

◆ Position the vehicle on the stand, see p. 82 (POSITIONING THE VEHICLE ON THE STAND).

x Partially raise the rear side edge of the seat.

x Unscrew and remove the screw (1) and take the bushing (2).

Screw (1) driving torque: 8.679 Ftlb (12 Nm).

◆ Raise and remove the seat (3).

NOTE Upon reassembly, insert the front tag of the seat in the appropriate seat.

⚠ CAUTION

Before leaving, make sure that the seat (3) is properly positioned and locked.

LIFTING THE FUEL TANK

Carefully read p. 53 (FUEL) and p. 83 (MAINTENANCE).

⚠ WARNING

Risk of fire.
Wait until the engine and the exhaust silencer have completely cooled down.

Fuel vapors are toxic for your health.

Before proceeding, make sure that the room in which you are working is properly ventilated.

Do not inhale fuel vapors.

Do not smoke and do not use naked flames.

DO NOT DISPOSE OF FUEL IN THE ENVIRONMENT.

} Remove the passenger seat, see p. 50 (UNLOCKING/LOCKING THE PASSENGER SEAT).

◆ Remove the rider seat, see p. 106 (REMOVING THE RIDER SEAT).

◆ Unscrew and remove the two screws (4) that fasten the front part of the fuel tank (5).

◆ Remove the fuel tank support rod (8) from the relevant anchorage seats (6-7).

NOTE The rubber-covered end of the rod (8) must be introduced in the central hole of the steering stem.

◆ Lift the front part of the fuel tank (5) and introduce the rod (8) as indicated in the figure.

Downloaded from www.Manualslib.com manuals search engine

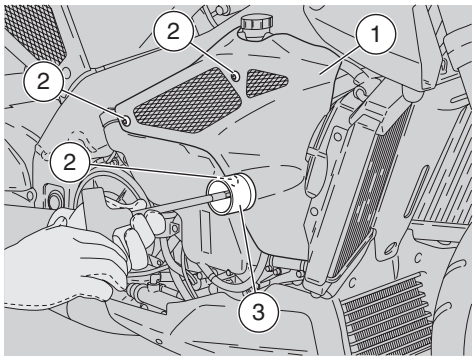

REMOVING THE SIDE FAIRINGS

Carefully read p. 83 (MAINTENANCE).

⚠ WARNING

Wait until the engine and the exhaust silencer have completely cooled down.

- Position the vehicle on the stand, see p. 82 (POSITIONING THE VEHICLE ON THE STAND).
- Remove the nylon protection (3).
- Unscrew the three retaining screws (2).

⚠ CAUTION

Handle plastic and paint-finished parts with care to avoid scratching or damage.

- Remove the side fairing (1).

NOTE Repeat these operations to remove the other side fairing.

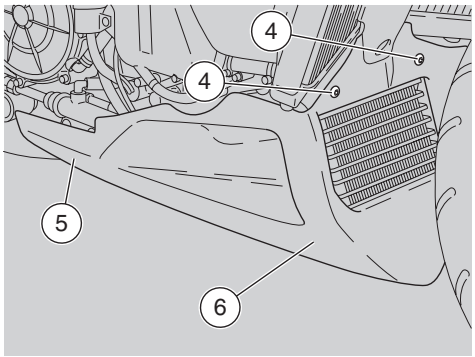

REMOVING THE LOWER FAIRING

Carefully read p. 83 (MAINTENANCE).

NOTE To remove the lower fairing, it is necessary to use the appropriate rear service stand g .

- Place the vehicle on the rear service stand, see p. 96 (POSITIONING THE VEHICLE ON THE REAR SERVICE STAND g).
- Release and remove the two front screws (4).
- Release and remove the two rear side screws (5).
- Remove the lower fairing (6).

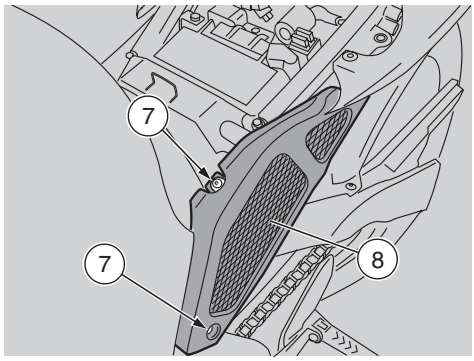

REMOVING THE SIDE BODY PANELS

- Remove the rider seat, see p. 106 (REMOVING THE RIDER SEAT).
- Unscrew and remove the two screws (7).

⚠ CAUTION

Handle plastic and paint-finished parts with care to avoid scratching or damage.

- Remove the side body panel (8).

NOTE Upon reassembly, make sure that the rear coupling is positioned correctly.

Repeat these operations to remove the other side body panel.

Downloaded from www.Manualslib.com manuals search engine

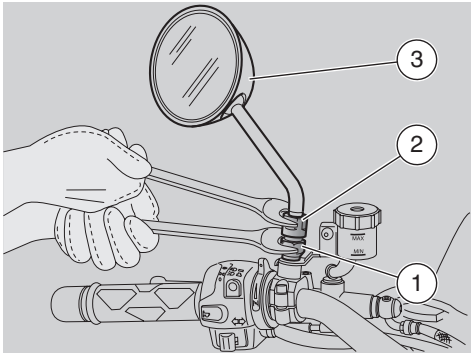

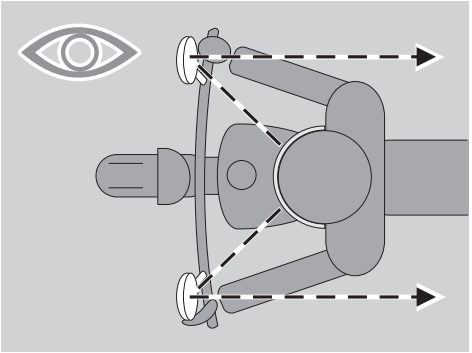

REMOVING THE REAR-VIEW MIRRORS

◆ Position the vehicle on the stand, see p. 82 (POSITIONING THE VEHICLE ON THE STAND).
◆ Unscrew and remove the nut (1) and the locknut (2) using suitable spanners.

⚠ CAUTION

Handle plastic and paint-finished parts with care to avoid scratching or damage.

◆ Remove the rear-view mirror (3).

NOTE Repeat these operations to remove the other rear-view mirror.

⚠ CAUTION

After reassembly, correctly adjust the rear-view mirrors and tighten the nuts in such a way as to ensure their stability.

After reassembly:

◆ Adjust the inclination of the rear-view mirrors correctly.

Downloaded from www.Manualslib.com manuals search engine

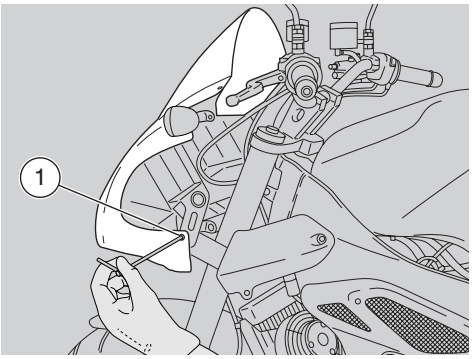

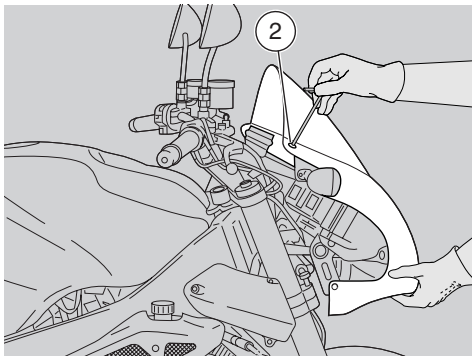

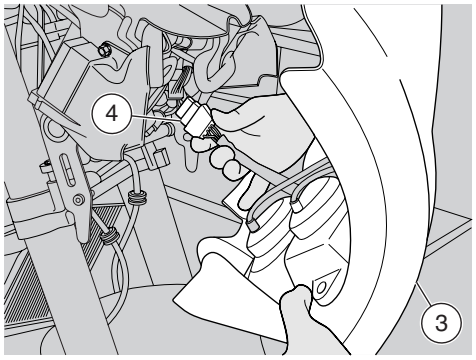

REMOVING THE FRONT FAIRING

- Position the vehicle on the stand, see p. 82 (POSITIONING THE VEHICLE ON THE STAND).
- Turn the ignition switch to position “ 0 ”.
- Unscrew and remove the two side screws (1).

x Unscrew and remove the two upper screws (2).

⚠ CAUTION

Upon reassembly, tighten the screw (2) moderately, since it is fixed on plastic.

- Move the front fairing (3) slightly forward.
- Disconnect the electrical connector (4) of the headlight.
- Remove the front fairing (3) completely, together with the headlight.

⚠ CAUTION

Upon reassembly, make sure that the electric connector (4) is fitted to the matching connector.

⚠ CAUTION

Handle plastic and paint-finished parts with care to avoid scratching or damage.

Downloaded from www.Manualslib.com manuals search engine

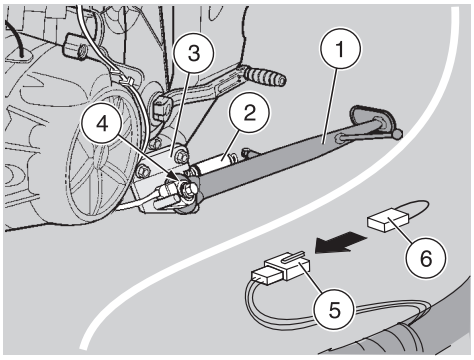

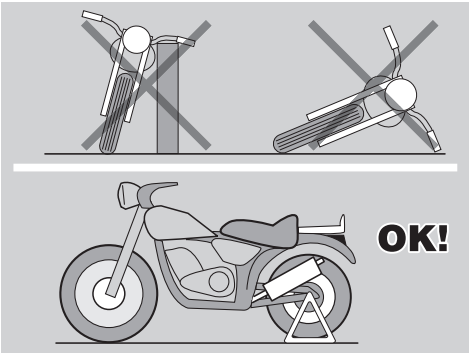

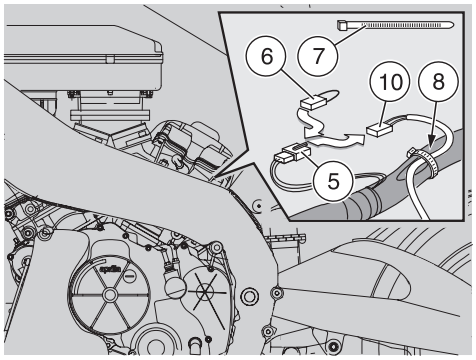

REMOVING THE SIDE STAND

Carefully read p. 83 (MAINTENANCE).

Only when the vehicle must be used on racetracks, it is advisable to remove the stand (1) complete with:

– springs (2);
– support (3);
– safety switch (4).

NOTE The removal of the safety switch (4) disconnects the electric circuit; to restore it, connect the wiring (6) (**aprilia** part # 8124943), which is available at any **aprilia Official Dealer**, to the connector (5).

⚠ CAUTION

Neither lean the vehicle against walls, nor lay it on the ground.

To park the vehicle without stand (the removal of the stand is allowed only for the use of the vehicle on racetracks), always and exclusively use the rear service stand g .

⚠ WARNING

It is forbidden to disconnect or remove the safety switch (4) separately from the stand.
The disconnection or removal of the safety switch (4) alone makes it possible to start the vehicle and leave with the stand down, which may result in a fall and in serious injuries to the rider and other people and damage to the vehicle itself.

For the removal, proceed as follows:

- Remove the left side body panels, see p. 107 (REMOVING THE SIDE BODY PANELS).
- Remove the lower fairing, see p. 107 (REMOVING THE LOWER FAIRING).
- Lift the fuel tank, see p. 106 (LIFTING THE FUEL TANK)

NOTE Prepare a clamp (7) to be used for the reassembly.

⚠ CAUTION

Do not force cables, pipes, connectors and wires.

- Cut the clamp (8) and release the cable (9).
- Disconnect the electric connector (10) from the connector (5).
- Connect the wiring (6) (**aprilia** part # 8124943) [replacing the electric connector (10)].

Downloaded from www.Manualslib.com manuals search engine

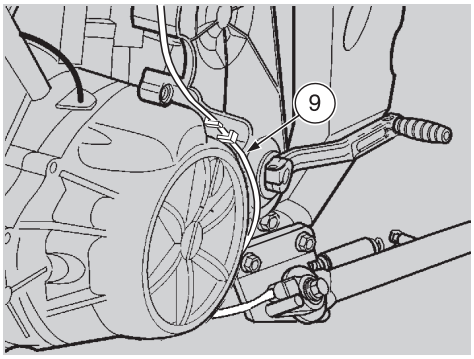

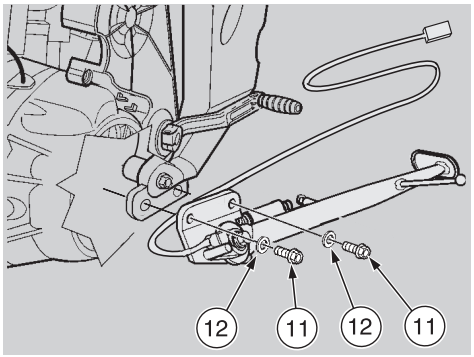

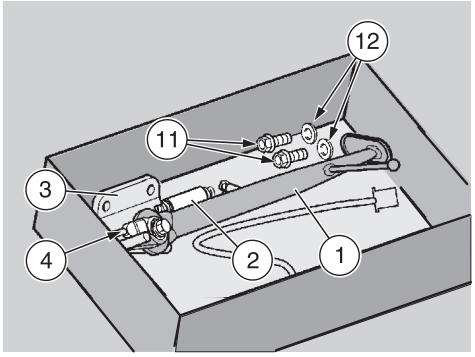

◆ Withdraw the cable (9) completely.
◆ Put back the fuel tank, see p. 106 (LIFTING THE FUEL TANK).
◆ Put back the left side body panel, see p. 107 (REMOVING THE SIDE BODY PANELS).

NOTE Support the stand, in order to prevent it from accidentally falling down.

Screws driving torque (11): 28.930 Ftlb (40 Nm) .

◆ Unscrew and remove the screws (11) and take the washers (12).
◆ Remove the stand (1) complete with:
– springs (2);
– support (3);
– safety switch (4).

NOTE Store the following components together: complete stand, screws (11) and washers (12), in order to be able to install them correctly when the vehicle must be used on roads.

◆ Put back the lower fairing (and the two side fairings), see p.107 (REMOVING THE LOWER FAIRING).

Downloaded from www.Manualslib.com manuals search engine

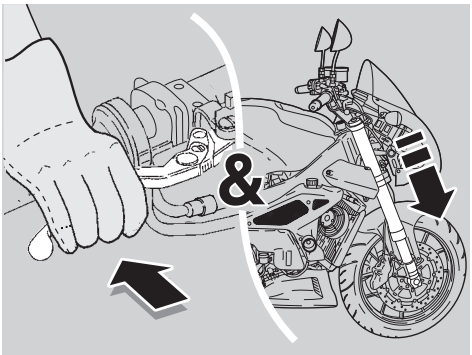

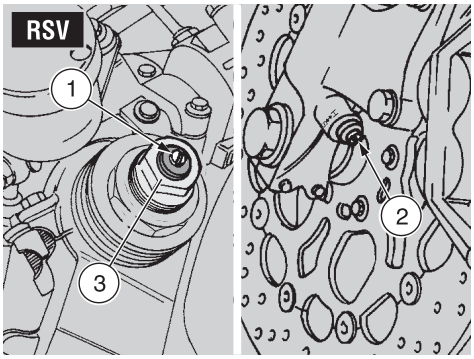

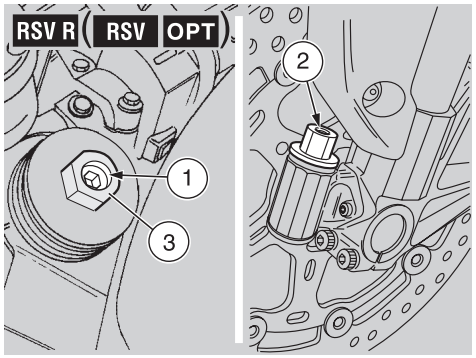

INSPECTING THE FRONT AND REAR SUSPENSIONS

Carefully read p. 83 (MAINTENANCE).

NOTE Have the front fork oil changed by an **aprilia Official Dealer**, who will ensure you prompt and accurate servicing.

NOTE Perform the maintenance operations with half the frequency indicated if the vehicle is used in rainy or dusty areas, on uneven surfaces or on racetracks.

Have the front fork oil changed after the first 4687 mi (7500 km) and successively every 14000 mi (22500 km).

With "R" front fork q (R g), have the oil changed every 6250 mi (10000 km).

Carry out the following checks after the first 625 mi (1000 km) and successively every 9375 mi (15000 km):

- With pulled front brake lever, press the handlebar repeatedly, thrusting the fork downwards. The stroke must be gentle and there must be no trace of oil on the legs.
- Check the fastening of all the components and the functionality of the front and rear suspension joints.

⚠ CAUTION

If you notice irregularities in the operation or if the help of a qualified technician is necessary, contact your aprilia Official Dealer.

FRONT SUSPENSION

| Have the fork oil seals changed by an **aprilia Official Dealer** after the first 1875 mi (30000 km) and successively every 14000 mi (22500 km).

} Every 4687 mi (7500 km), contact an **aprilia Official Dealer** to have fork oil seal inspected, cleaned, lubricated and changed, if necessary.

The front suspension consists of an hydraulic fork connected to the steering column by means of two plates.

For the setting of the vehicle attitude, each rod of the fork is provided with an upper screw (1) for the adjustment of the hydraulic rebound damping, a lower screw (2) for the adjustment of the hydraulic compression damping and an upper nut (3) for the adjustment of the spring preload.

Downloaded from www.Manualslib.com manuals search engine

ADJUSTING THE FRONT FORK

⚠ CAUTION

Do not force the rotation of the adjusters (1-2) beyond the end of stroke in both directions, in order to avoid any damage. Set the same spring preload and hydraulic damping for both legs: a different setting of the legs decreases the stability of the vehicle while riding. When the spring preload is increased, it is necessary to increase also the hydraulic damping, in order to avoid sudden jerks while riding.

For the adjustment of the fork:

– R see p. 113 (FORK R);
– q (R g) see p.114 (“ N ” FORK q (R g)).

FORK R

The standard setting of the front fork is such as to satisfy most driving conditions at low and high speed, either with reduced load and full load.

However, it is also possible to adjust the setting according to the intended use of the vehicle.

⚠ CAUTION

For the adjustment, always start from the most rigid setting [complete clockwise rotation of the adjusters (1-2)]. Use the notches (1-2) provided on the adjusters as reference marks for the adjustment of the hydraulic compression and rebound damping.

Gradually rotate the adjusters (1-2) giving 1/8 turn per time.

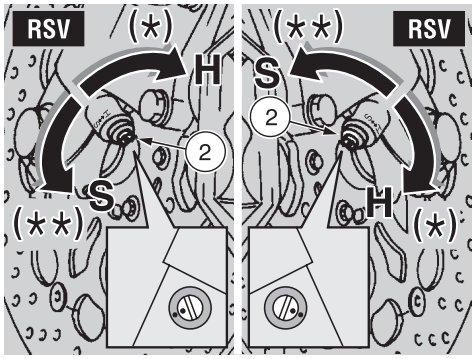

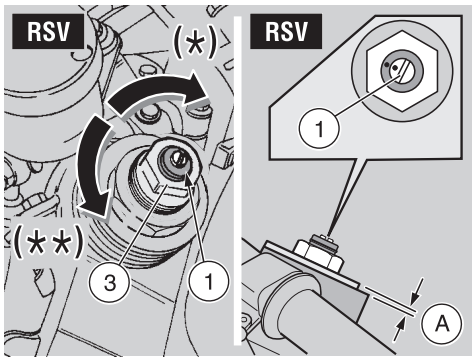

⚠ WARNING

The adjustments for the use of the vehicle on racetracks must be carried out exclusively in case of organized races or events that take place on isolated circuits, away from public roads and with the consent of the competent authorities.

It is strictly prohibited to carry out adjustments for the use of the vehicle on racetracks and then ride it on roads or motorways.

Front suspension	Standard adjustment	On racetracks
Hydraulic rebound adjustment, screw (1)	from completely closed (*) open (**) 1.25 turns	from completely closed (*) open (**) 0.5 – 1 turn
Hydraulic compression adjustment, screw (2)	from completely closed (*) (H) open (**) (S) 1 turn	from completely closed (*) (H) open (**) (S) 0.5 – 1 turn
Spring preload, nut (3)	from completely closed (*) open (**) 4 – 5 reference notches	
Protrusion of legs (A) (***) from the upper plate (plug excluded)	3 reference notches	4 reference notches

(*) = clockwise
(**) = anticlockwise

(***) = Have this type of adjustment carried out exclusively by an **aprilia Official Dealer**.

Downloaded from www.Manualslib.com manuals search engine

“ N ” FORK q (R g)

The standard setting of the front fork is adjusted in such a way as to be suitable for racetrack riding.

However, it is possible to adjust the setting according to how the vehicle is going to be used.

⚠ CAUTION

To calculate the number of clicks of the adjusters (1-2), always start from the most rigid setting (complete clockwise rotation of the adjuster).

Use the adjusters (1-2) as reference point for the adjustment of the hydraulic compression and rebound damping (1-2).

Give the adjusters (1-2) one notch at a time.

⚠ WARNING

The adjustments for the use of the vehicle on racetracks must be carried out exclusively in case of organized races or events that take place on isolated circuits, away from public roads and with the consent of the competent authorities.

It is strictly prohibited to carry out adjustments for the use of the vehicle on racetracks and then ride it on roads or motorways.

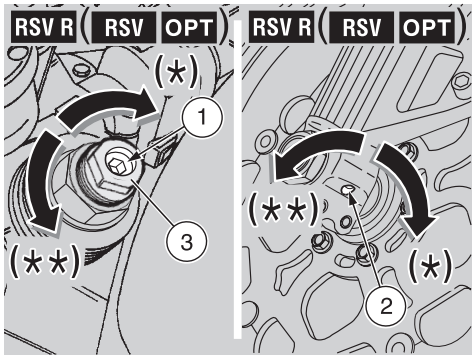

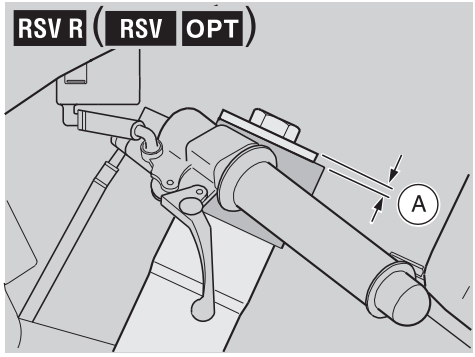

Front suspension	Standard adjustment	On racetracks
Hydraulic rebound damping adjustment, screw (1)	from completely closed (*) unscrew (**) 12 clicks	from completely closed (*) unscrew (**) 8– 10 clicks
Hydraulic compression damping adjustment, screw (2)		
Spring preload, nut (3)	from completely open (**) screw (*) 8 turns	from completely open (**) screw (*) 6– 9 turns
Protrusion of the legs (A) (***) from the upper plate (plug excluded)	4 reference notches	

(*) = clockwise

(**) = anticlockwise

(***) = Have this type of adjustment carried out exclusively by an **aprilia Official Dealer**

Downloaded from www.Manualslib.com manuals search engine

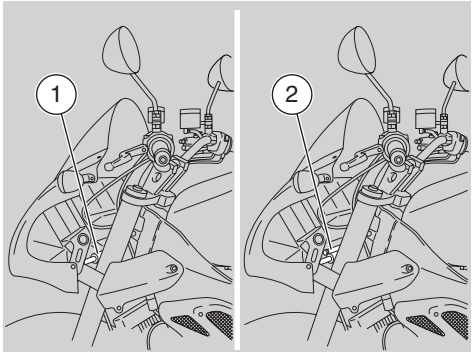

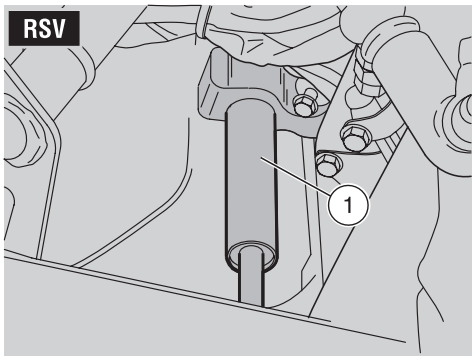

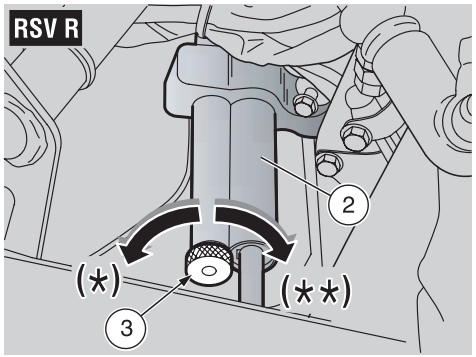

STEERING DAMPER

The standard R model is equipped with a non-adjustable steering damper (1).

The standard q model, instead, is equipped with adjustable steering damper (2).

ADJUSTABLE STEERING DAMPER

The adjustable steering damper (2) is provided with a knob (3) for the adjustment of the hydraulic damping (see table).

For the adjustment, proceed as follows:

◆ Rotate the handlebar completely leftwards.

⚠ CAUTION

For the adjustment, always start from the most rigid setting (complete anticlockwise rotation of the knob).

◆ Act on the knob (3) to adjust the hydraulic damping (see table).

Adjustable steering damper	Standard adjustment	Adjustment range
Adjustment	from completely closed (**) open (*) 15 clicks	from completely closed (**) open (*) 2 – 17 clicks

(*) = anticlockwise

(**) = clockwise

Downloaded from www.Manualslib.com manuals search engine

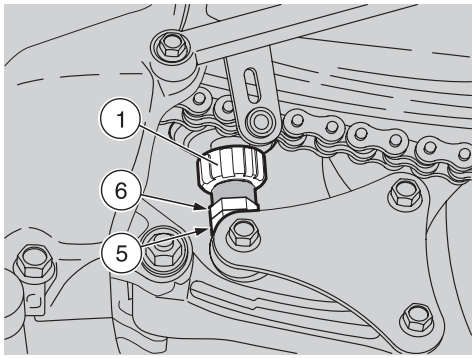

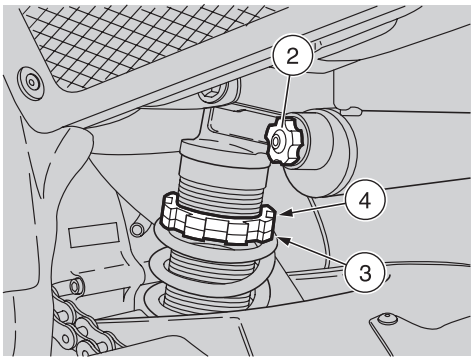

REAR SUSPENSION

The rear suspension consists of a spring-shock absorber unit, fixed to the frame by means of a uni-ball and to the rear swinging arm by means of lever systems.

For the adjustment of the setting, the shock absorber is provided with a ring nut adjuster (1) for the hydraulic rebound damping, with a knob adjuster (2) for the hydraulic compression damping, with a ring nut for the spring preload (3) and with a locking ring nut (4).

NOTE It is possible to adjust the height of the rear part of the vehicle, to personalize the attitude of the vehicle itself.

ADJUSTING THE REAR SHOCK ABSORBER

NOTE Perform the maintenance operations with half the frequency indicated if the vehicle is used in rainy or dusty areas, on uneven surfaces or on racetracks.

Check and if necessary adjust the rear shock absorber every 9375 mi (15000 km).

The standard setting of the rear shock absorber is adjusted in such a way as to be suitable for racetrack riding.

However, it is possible to adjust the setting according to how the vehicle is going to be used.

⚠ CAUTION

To calculate the number of clicks of the adjusters (1-2), always start from the most rigid setting (complete clockwise rotation of the adjuster).

Do not force the rotation of the adjusters (1-2) beyond the end of stroke in both directions, in order to avoid any damage.

- Unscrew the locking ring nut (4) by means of the appropriate spanner.
- Adjust the preload of the spring (B) through the adjusting ring nut (3) (see table).
- After the adjustment, tighten the metal ring (4).
- Adjust the ring nut (1) to adjust the hydraulic rebound damping (see table).
- Adjust the knob (2) to adjust the hydraulic compression damping (see table).

To vary the attitude of the vehicle, proceed as follows:

- Moderately loosen the lock nut (5).
- Adjust the shock absorber length (A) (distance between centers) through the adjuster (6) (see table).

⚠ CAUTION

The lock nut (5) must be tightened with the indicated driving torque.

- After the adjustment, tighten the lock nut (5).

Lock nut (5) driving torque: 28.930 Ftlb (40 Nm).

Downloaded from www.Manualslib.com manuals search engine

⚠ CAUTION

Adjust the spring preload and the hydraulic rebound damping according to the conditions of use of the vehicle.

When the spring preload is increased, it is necessary to increase also the hydraulic rebound damping, in order to avoid sudden jerks while riding.

If necessary, contact an aprilia official Deler.

⚠ CAUTION

R **In order not to affect the functionality of the shock absorber, do not loosen or remove the screw (7), since this may cause an emission of nitrogen with the consequent risk of accidents.**

⚠ CAUTION

q (R g) **In order to avoid compromising the operation of the shock absorber, neither loosen the screw (8), nor work on the underlying membrane, since this may cause an emission of nitrogen with consequent risk of accident.**

⚠ CAUTION

The adjustments for the use of the vehicle on racetracks must be carried out exclusively in case of organized races or events that take place on isolated circuits, away from public roads and with the consent of the competent authorities. It is strictly prohibited to carry out adjustments for the use of the vehicle on racetracks and then ride it on roads or motorways.

Rear suspension	Standard adjustment	On racetracks
Shock absorber distance between centers (A)	321 ±1.5 mm	from 321 to 323 mm
Spring length (preloaded) (B)	147 mm	145 mm
Rebound adjustment, ring nut (1)	from completely closed (*) open (**) 20 clicks	from completely closed (*) open (**) - R 12-16 clicks - q 13-16 clicks
Compression adjustment, knob (2)	from completely closed (*) open (**) 12 clicks	from completely closed (*) open (**) 8 – 14 clicks

(*) = clockwise

(**) = anticlockwise

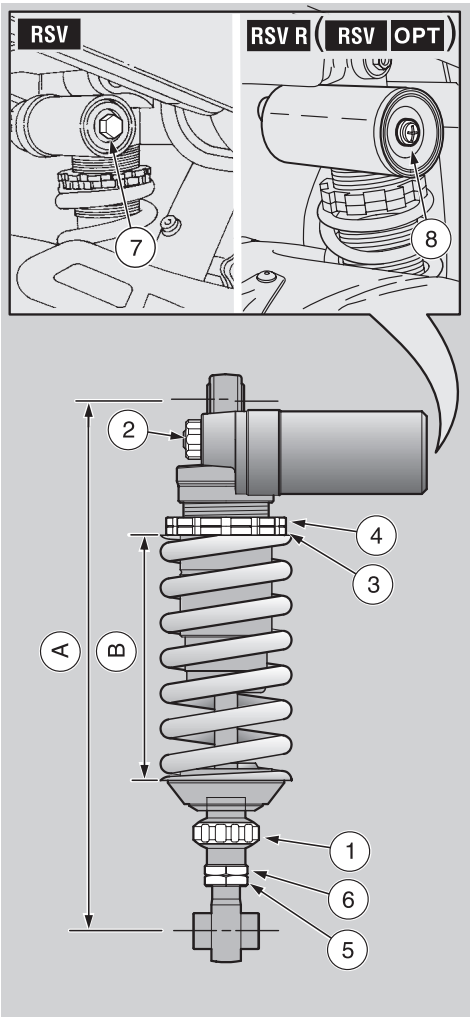

Downloaded from www.Manualslib.com manuals search engine

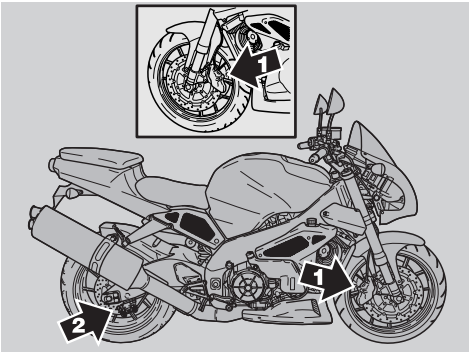

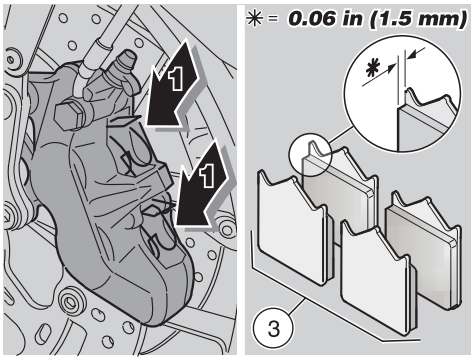

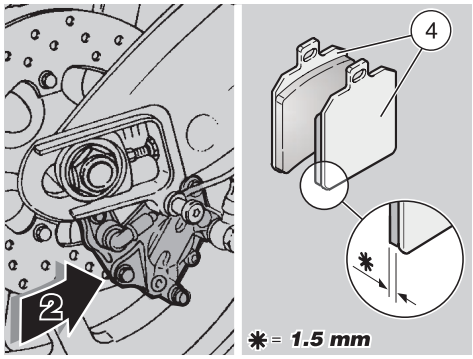

CHECKING THE BRAKE PAD WEAR

Carefully read p. 56 (BRAKES), p. 57 (DISC BRAKES) and p. 83 (MAINTENANCE).

NOTE Your vehicle is equipped with disc brakes and two separate brake systems. The front brake system is equipped with two discs, one on the right and one on the left side of the front wheel. The rear brake system is equipped with a single disc on the right side of the wheel. The following information may refer to a single braking system, but is applicable for both braking systems. Check the brake pad wear after the first 600 mi (1,000 km), before every trip and thereafter every 4,650 mi (7,500 km). The amount of wear that the brake pads experience depends on how the vehicle is used, how aggressively it is driven, and the condition of the roads upon which it is operated. Wear will be faster than normal when the vehicle is driven aggressively, or on dusty or wet roads.

⚠ WARNING

Check the wear of the brake pads before every trip.

CHECKING WEAR OF THE BRAKE PADS

- Place the vehicle on the stand, 82 (POSITIONING THE VEHICLE ON THE STAND).
- Perform a visual check of the friction material thickness. Use a flashlight. See the arrows (1) and (2) above.

If the friction material on one pad of a pair, front (3) or rear (4), is worn to **0.06 in (1.5 mm)** or less, replace both pads.

⚠ WARNING

Excessive wear of the friction material would cause the contact of the pad metal support with the disc, with consequent metallic noise and production of sparks from the caliper; braking efficiency and safety will be seriously compromised.
This could lead to a crash, with subsequent serious injury or death.

⚠ WARNING

Have the pads changed by your local aprilia Official Dealer

Downloaded from www.Manualslib.com manuals search engine

ADJUSTING THE COLD START CONTROL (/)

⚠ CAUTION

The operations necessary to adjust the cold start control " / " require specific skills and therefore should be carried out by an aprilia Official Dealer.

IDLING ADJUSTMENT

Carefully read p. 83 (MAINTENANCE).

Adjust the idling every time it is irregular.

To carry out this operation, proceed as follows:

- ◆ Ride for a few miles until reaching the normal running temperature, see p. 19 (Coolant temperature " (").
- ◆ Position the gear shift lever in neutral (green warning light " . " on).
- ◆ Check the engine idling rpm on the revolution counter.

The engine idling speed must be about 1250 ± 100 rpm.

If necessary, proceed as follows:

- ◆ Turn the adjusting knob (1).
- – BY SCREWING IT (clockwise), you increase the rpm;
- – BY UNSCREWING IT (anticlockwise), you decrease the rpm;
- ◆ Twist the throttle grip, accelerating and decelerating a few times to make sure that it functions correctly and to check if the idling speed is constant.

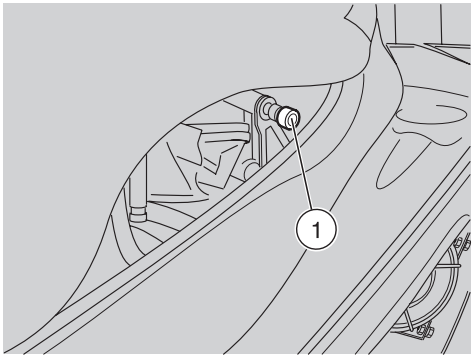

NOTE If necessary, contact your **aprilia Official Dealer**.

ADJUSTING THE THROTTLE CONTROL

Carefully read p. 83 (MAINTENANCE).

NOTE Perform the maintenance operations with half the frequency indicated if the vehicle is used in rainy or dusty areas, on uneven surfaces or on racetracks.

Have the throttle control cables checked by an **aprilia Official Dealer** after the first 625 mi (1000 km) and successively every 4687 mi (7500 km).

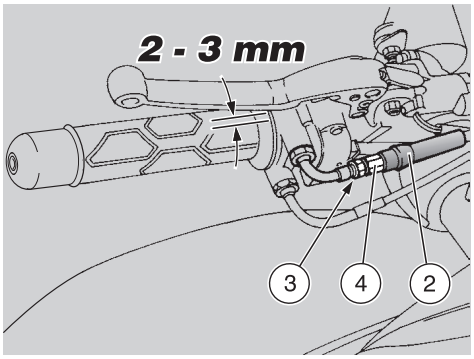

The idle stroke of the throttle grip must be **2–3 mm**, measured on the edge of the grip itself.

If not, proceed as follows:

- ◆ Position the vehicle on the stand, see p. 82 (POSITIONING THE VEHICLE ON THE STAND).
- ◆ Withdraw the protection element (2).
- ◆ Loosen the lock nut (3).
- ◆ Rotate the adjuster (4) in such a way as to restore the prescribed value.
- ◆ After the adjustment, tighten the lock nut (3) and check the idle stroke again.
- ◆ Put back the protection element (2).

⚠ CAUTION

After the adjustment, make sure that the rotation of the handlebar does not modify the engine idling rpm and that the throttle grip returns smoothly and automatically to its original position after being released.

Downloaded from www.Manualslib.com manuals search engine

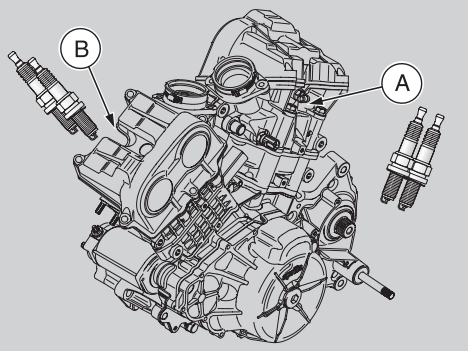

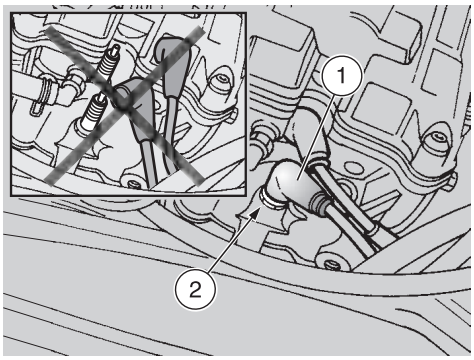

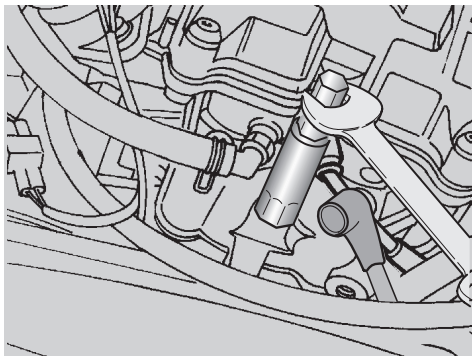

SPARK PLUGS

Carefully read p. 83 (MAINTENANCE).

NOTE Perform the maintenance operations with half the frequency indicated if the vehicle is used in rainy or dusty areas, on uneven surfaces or on racetracks.

⚠ CAUTION

Check, clean or change all the spark plugs, one by one.

Check the spark plugs every 4687 mi (7500 km), change them every 9375 mi (15000 km).

In case of use on racetracks, change the spark plugs every 2343 mi (3750 km).

Periodically remove the spark plugs and clean them carefully, removing carbon deposits; change them if necessary.

⚠ CAUTION

Even if only one spark plug needs changing, always replace all of them.

To reach the spark plugs:

⚠ CAUTION

Before carrying out the following operations, let the engine and the silencer cool down until they reach room temperature, in order to avoid burns.

- Lift the fuel tank, see p. 75 (LIFTING THE FUEL TANK)

NOTE The vehicle is equipped with two spark plugs per cylinder (A) and (B).

The following operations refer to the two spark plugs of one cylinder, but are valid for both cylinders.

⚠ CAUTION

Carry out all the operations indicated on the first spark plug and then repeat them on the second spark plug of the same cylinder.

For the removal, proceed as follows:

⚠ CAUTION

Do not invert the position of the two spark plug caps.
Do not remove the two spark plug caps at the same time.

- Remove the cap (1) of the spark plug (2).
- Remove any trace of dirt from the spark plug base.
- Fit the special spanner provided in the tool kit on the spark plug.
- Insert the 0.512 Inc (13 mm) fork spanner provided in the tool kit in the hexagonal seat of the spark plug spanner.
- Unscrew the spark plug and extract it from its seat, taking care to prevent dust or other substances from getting inside the cylinder.

Downloaded from www.Manualslib.com manuals search engine

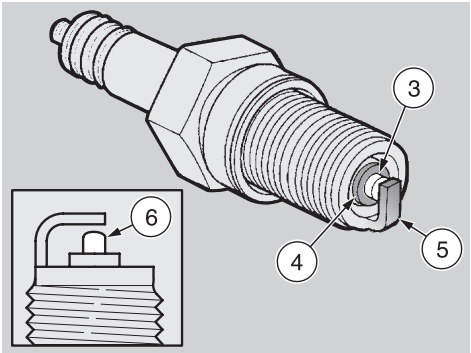

For the check and cleaning:

⚠ CAUTION

This vehicle is fitted with spark plugs featuring platinum-type electrodes.
To clean the spark plugs, do not use wire brushes and/or abrasive products, but only a pressurized air jet.

Key:

– center electrode (3);
– insulating (4);
– side electrode (5).

◆ Make sure that there are neither carbon deposits, nor corrosion marks on the electrodes and on the insulating material; if necessary, clean them with a pressurized air jet.

If the spark plug has crackings on the insulating material, corroded electrodes, excessive deposits or the tip (6) of the central electrode (3) is rounded, it must be changed.

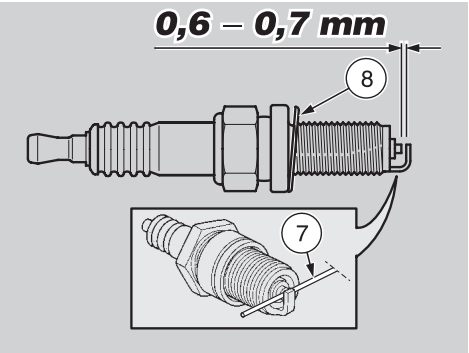

⚠ CAUTION

When changing the spark plug, check the thread pitch and length.

If the threaded part is too short, the carbon deposits will accumulate on the thread seat, and therefore the engine may be damaged during the installation of the right spark plug.

Use the recommended type of spark plugs only, see p. 140 (TECHNICAL DATA), in order not to compromise the life and performance of the engine.

To check the spark plug gap, use a wire thickness gauge (7) to avoid damaging the platinum covering.

◆ Check the spark plug gap with a wire thickness gauge (7).

⚠ CAUTION

Do not try to recover the spark plug gap in any way.

The gap must be **0.024±0.028 inc (0.6 – 0.7 mm)**, otherwise it is necessary to change the spark plug.

◆ Make sure that the washer (8) is in good conditions.

For the installation:

◆ With the washer on (8), screw the spark plug by hand in order not to damage the thread.
◆ Tighten the spark plug by means of the spanner you will find in the tool kit, giving it half a turn to compress the washer.

Spark plug driving torque: 14.465 Ftlb (20 Nm).

⚠ CAUTION

The spark plug must be well tightened, otherwise the engine may overheat and be seriously damaged.

◆ Position the spark plug cap (1) properly, so that it does not come off due to the vibrations of the engine.

NOTE Repeat the operations described on the second spark plug of the same cylinder and successively on both spark plugs of the other cylinder.

◆ Put back the fuel tank, see p. 106 (LIFTING THE FUEL TANK).

Downloaded from www.Manualslib.com manuals search engine

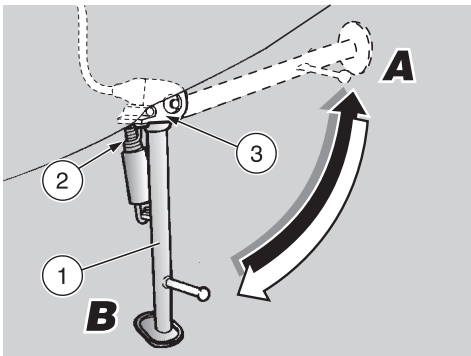

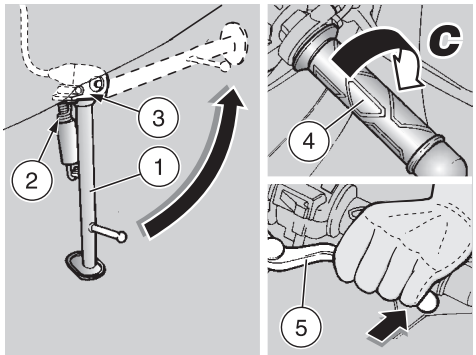

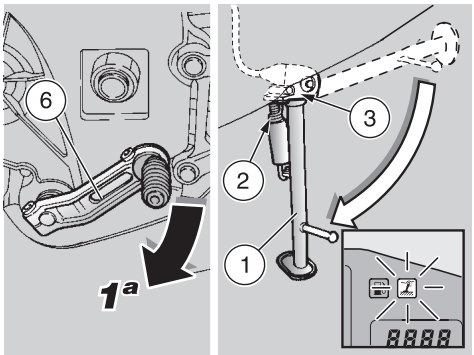

CHECKING THE SIDE STAND

Carefully read p. 83 (MAINTENANCE) and p. 127 (CHECKING THE SWITCHES).

The side stand (1) has two positions:

– normal or lifted (**Pos.A**);
– extended (**Pos.B**).

It is the rider who must provide for extending and lifting the stand.

The side stand (1) must rotate without hindrances.

The springs (2) provide for keeping the stand in the desired position (extended or lifted).

Carry out the following checks:

- Position the vehicle on the appropriate rear service stand, see p. 96 (POSITIONING THE VEHICLE ON THE REAR SERVICE STAND g).
- The springs (2) must not be damaged, worn, rusty or weakened.
- Make sure that the stand presents no slack in either position (extended and lifted).
- Lower the stand, making sure that the springs provide for extending it completely.
- Move the stand to let it up and release it halfway to make sure that the springs provide for lifting it completely.
- The side stand must rotate freely, if necessary grease the joint, see p. 144 (LUBRICANT CHART).

The side stand (1) is provided with a safety switch (3) that has the function to prevent or interrupt the operation of the engine with the gears engaged and the side stand (1) down.

To check the proper functioning of the safety switch (3), proceed as follows:

- Remove the rear service stand, see p. 96 (POSITIONING THE VEHICLE ON THE REAR SERVICE STAND g).
- Seat on the vehicle in driving position.
- Fold the side stand (1).
- Start the engine, see p. 49 (STARTING).
- With released throttle grip (4) (**Pos.C**) and engine idling, pull the clutch lever (5) completely.
- Engage the first gear, by pushing the gear shift lever (6) downwards.
- Lower the side stand (1), thus triggering the safety switch (3).

At this point:

– the engine must stop;
– the “side stand down” warning light “¦” must come on.

⚠ CAUTION

If the engine does not stop, contact an aprilia Official Dealer.

Downloaded from www.Manualslib.com manuals search engine

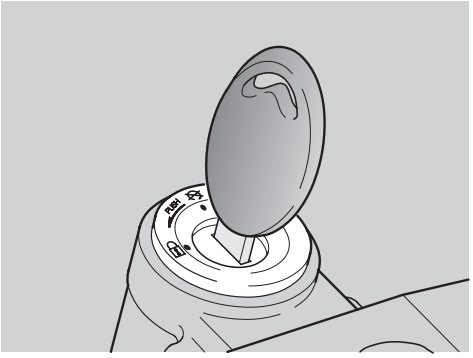

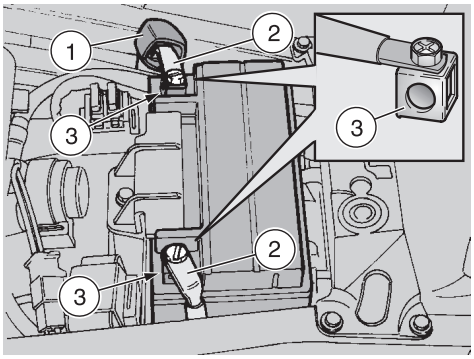

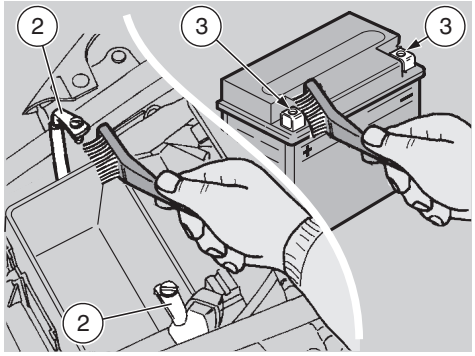

BATTERY

Carefully read p. 83 (MAINTENANCE).

⚠ WARNING

Risk of fire.

Keep fuel and other flammable substances away from the electrical components.

Never invert the connection of the battery cables.

Connect and disconnect the battery with the ignition switch in position "0", otherwise some components may be damaged.

Connect first the positive cable (+) and then the negative cable (–).

Disconnect following the reverse order.

NOTE This vehicle is provided with a maintenance-free battery and no servicing is necessary, excepting occasional checks and the recharge when required.

CHECKING AND CLEANING THE TERMINALS

Carefully read p. 123 (BATTERY).

- Make sure that the ignition switch is in position "0".
- Remove the rider seat, see p. 106 (REMOVING THE RIDER SEAT).
- Remove the red protection element (1).
- Make sure that the cable terminals (2) and the battery terminals (3) are:
  - in good conditions (and not corroded or covered with deposits);
  - covered with neutral grease or vaseline.

If necessary, proceed as follows:

- Remove the battery, see p. 124 (REMOVING THE BATTERY).
- Brush the cable terminals (2) and the battery terminals (3) with a wire brush, in order to eliminate any trace of corrosion.
- Install the battery, see p. 126 (INSTALLING THE BATTERY).

Downloaded from www.Manualslib.com manuals search engine

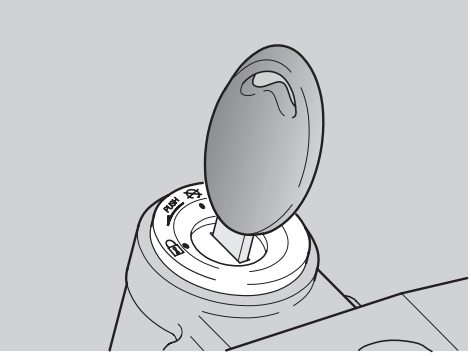

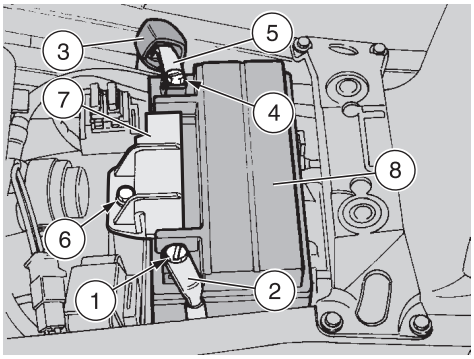

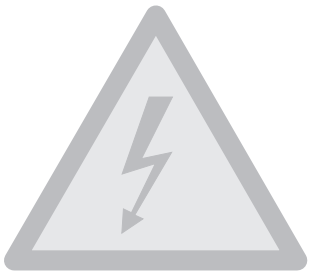

REMOVING THE BATTERY

⚠ CAUTION

To remove the battery it is necessary to set to zero the digital clock and the red line setting. To reset these functions, see p. 20 (MULTIFUNCTION COMPUTER).

Carefully read p. 123 (BATTERY).

- Make sure that the ignition switch is in position “ 0 ”.
- Remove the rider seat, see p. 106 (REMOVING THE RIDER SEAT).
- Unscrew and remove the screw (1) on the negative terminal (–).
- Move the negative cable (2) on the side.
- Remove the red protection element (3).
- Unscrew and remove the screw (4) on the positive terminal (+).
- Move the positive cable (5) on the side.
- Unscrew and remove the screw (6).
- Remove the bracket (7) that locks the battery.
- Grasp the battery (8) firmly and remove it from its compartment by lifting it.

⚠ WARNING

Once it has been removed, the battery must be stored in a safe place and kept away from children.

- Position the battery on a flat surface, in a cool and dry place.
- Put back the rider seat, see p. 106 (REMOVING THE RIDER SEAT).

NOTE For the installation of the battery, see p. 126 (INSTALLING THE BATTERY).

Downloaded from www.Manualslib.com manuals search engine

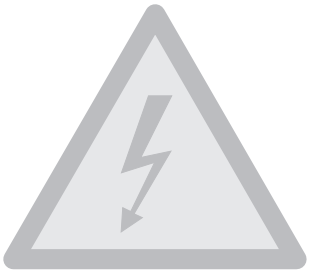

CHECKING THE ELECTROLYTE LEVEL

Carefully read p. 123 (BATTERY).

The vehicle is equipped with a maintenance-free battery, which does not require any check of the electrolyte level.

RECHARGING THE BATTERY

Carefully read p. 123 (BATTERY).

⚠ CAUTION

Do not remove the battery plugs: without plugs the battery may be damaged.

- Remove the battery, see p. 124 (REMOVING THE BATTERY).
- Prepare an appropriate battery charger.
- Set the charger for the desired type of recharge (see table).
- Connect the battery with a battery charger.

⚠ WARNING

During the recharging or the use, make sure that the room is properly ventilated and avoid inhaling the gases released during the recharging.

- Switch on the battery charger.

Type of recharge	Voltage (V)	Tension (A)	Time (hours)
Normal R	12	1.2	8 – 10
Quick R	12	12	0.5
Normal q	12	1.0	8 – 10
Quick q	12	10	0.5

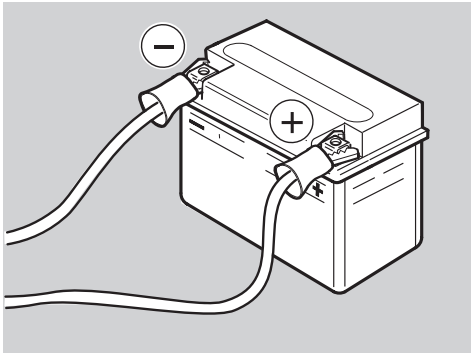

⚠ WARNING

Reassemble the battery only 5/10 minutes after disconnecting the recharge apparatus, since the battery continues to produce gas for a short lapse of time.

Downloaded from www.Manualslib.com manuals search engine

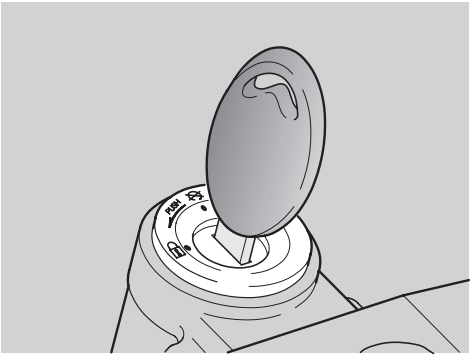

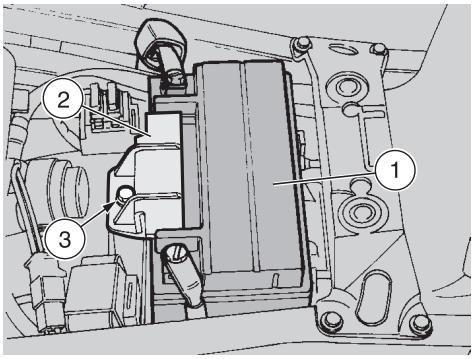

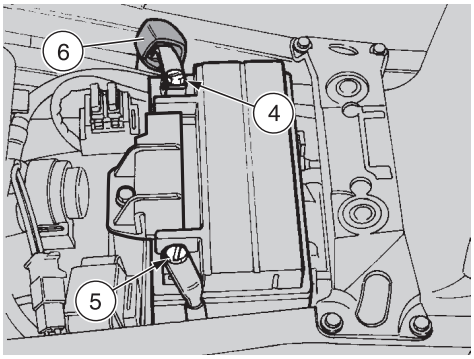

INSTALLING THE BATTERY

Carefully read p. 123 (BATTERY).

- Make sure that the ignition switch is in position " 0 ".
- Remove the rider seat, see p. 106 (REMOVING THE RIDER SEAT).

NOTE The battery (1) must be positioned in its compartment with the terminals directed towards the rear part of the vehicle.

- Put the battery (1) in its compartment.
- Put back the bracket (2) that locks the battery.
- Screw and tighten the screw (3).

⚠ WARNING

Upon reassembly, connect first the positive cable (+) and then the negative cable (–).

- Connect the positive terminal (+) by means of the screw (4).
- Connect the negative terminal (–) by means of the screw (5).
- Cover the terminals of the cables and of the battery with neutral grease or vaseline.
- Put back the red protection element (6).
- Put back the rider seat, see p. 106 (REMOVING THE RIDER SEAT).

⚠ CAUTION

To remove the battery it is necessary to set to zero the digital clock and the red line setting. To reset these functions, see p. 40 (MULTIFUNCTION COMPUTER).

Downloaded from www.Manualslib.com manuals search engine

LONG INACTIVITY OF THE BATTERY

⚠ CAUTION

If the vehicle remains unused for more than twenty days, disconnect the 30A fuses, in order to avoid the deterioration of the battery caused by the current consumption due to the multifunction computer.

NOTE The removal of the 30A fuses requires the setting to zero of the following functions: digital clock and red line setting. To reset these functions, see p. 40 (MULTIFUNCTION COMPUTER).

If the vehicle remains unused for more than fifteen days, it is necessary to recharge the battery, in order to prevent its sulphation, see p. 125 (RECHARGING THE BATTERY).

- Remove the battery, see p. 124 (REMOVING THE BATTERY) and put it in a cool and dry place.

It is important to check the charge periodically (about once a month), during the winter or when the vehicle remains unused, in order to prevent the deterioration of the battery.

- Recharge it completely with a normal charge, see p. 125 (RECHARGING THE BATTERY).

If the battery remains on the vehicle, disconnect the cables from the terminals.

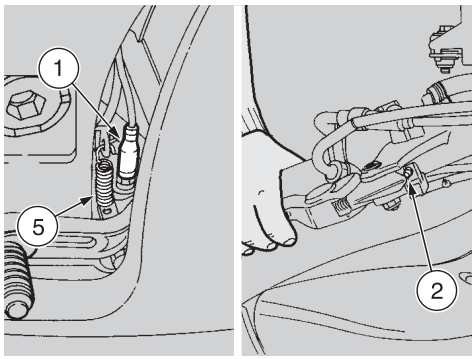

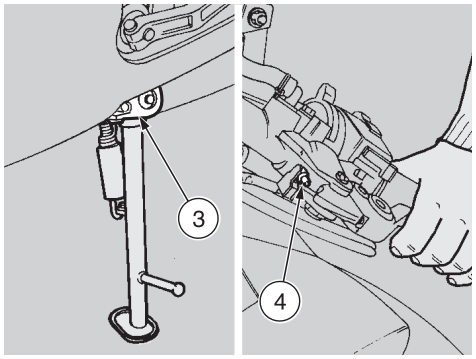

CHECKING THE SWITCHES

Carefully read p. 83 (MAINTENANCE).

The vehicle is provided with four switches:

1) Stoplight switch on the rear brake control lever;
2) Stoplight switch on the front brake control lever;
3) Safety switch on the side stand;
4) Switch on the clutch control lever.

- Make sure that there are no dirt or mud deposits on the switch; the pin must be able to move without interferences, returning automatically to its initial position.
- Make sure that the cables are connected correctly.
- Check the spring (5): it must not be damaged, worn or weakened.

Downloaded from www.Manualslib.com manuals search engine

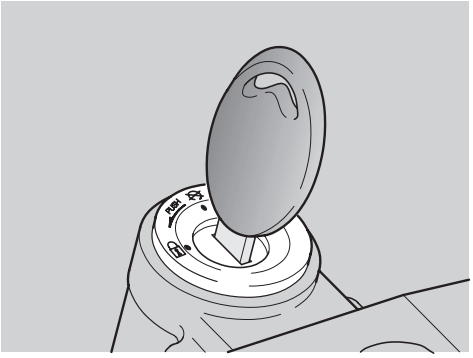

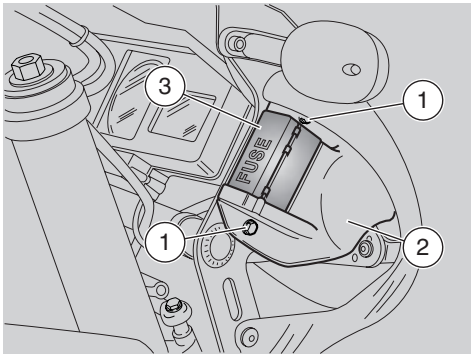

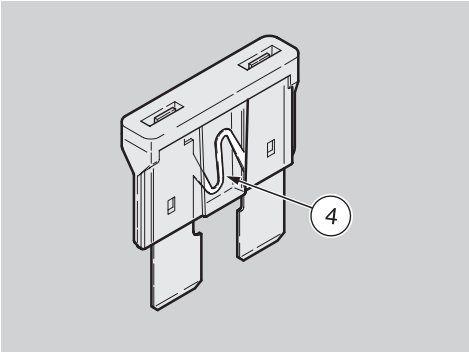

CHANGING THE FUSES

Carefully read p. 83 (MAINTENANCE).

⚠ CAUTION

Do not repair faulty fuses.

Never use fuses different from the recommended ones.

The use of unsuitable fuses may cause damages to the electric system or, in case of short circuit, even a fire.

NOTE If a fuse blows frequently, there probably is a short circuit or an overload in the electric system.

In this case it is advisable to consult an **aprilia Official Dealer**.

If an electric component does not work or works irregularly, or if the vehicle fails to start, it is necessary to check the fuses.

Check first the 15A secondary fuses and then the 30A primary fuses.

For the check, proceed as follows:

- Turn the ignition switch to position "0", to avoid any accidental short circuit.
- Loosen the screws (1).
- Move the protection cap (2).
- Open the cover of the box (3) containing the secondary fuses.
- Extract the fuses one by one and check if the filament (4) is broken.
- Before replacing a fuse, try to find out the cause of the trouble, if possible.
- Replace the damaged fuse with a new one having the same amperage.

NOTE If you use one of the spare fuses, put a new fuse in the proper seat.

- Remove the rider seat, see p. 106 (REMOVING THE RIDER SEAT).
- Carry out the operations previously described for the secondary fuses also for the main fuses.

NOTE The removal of the 30A fuses requires the setting to zero of the following functions: digital clock and red line setting.

To reset these functions, see p. 40 (MULTIFUNCTION COMPUTER).

Downloaded from www.Manualslib.com manuals search engine

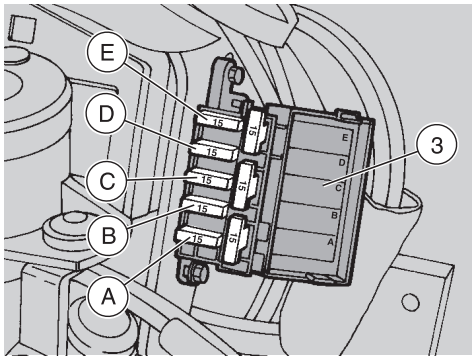

ARRANGEMENT OF THE 15A SECONDARY FUSES

A) From voltage regulator to:
high beam relay, low beam relay.

B) From voltage regulator to:
coils, engine stop relay, fuel pump.

C) From ignition switch to:
electric fans, clock.

D) From ignition switch to:
parking lights, rear stoplights, horn, dashboard lights, direction indicators.

E) From ignition switch to:
electronic control unit, fuel pump relay, engine stop relay.

NOTE Three fuses are spare fuses.

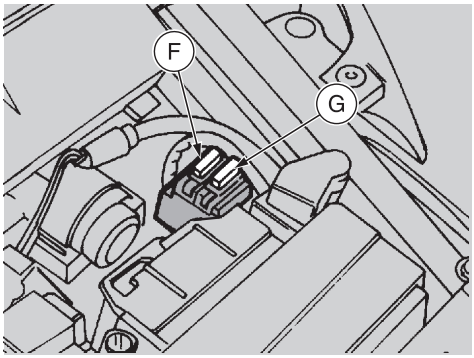

ARRANGEMENT OF THE 30A MAIN FUSES

F) From battery to: ignition.

G) From battery to: ignition.

NOTE One fuse is a spare fuse.

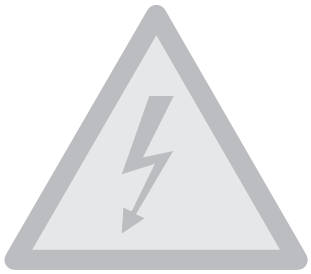

Downloaded from www.Manualslib.com manuals search engine

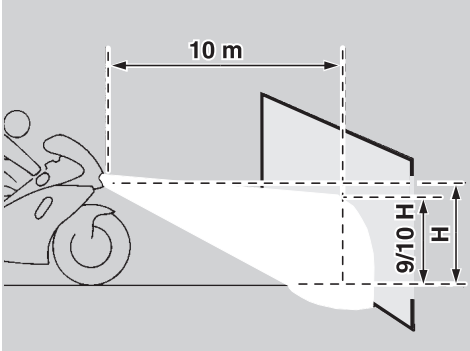

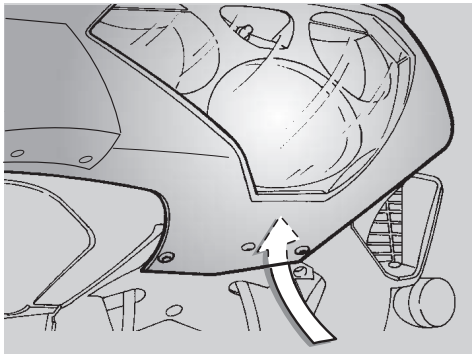

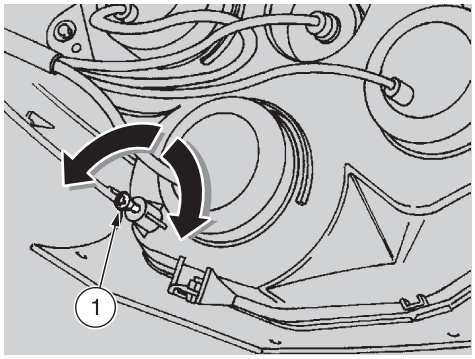

ADJUSTING THE VERTICAL HEADLIGHT BEAM

NOTE To check the direction of the headlight beam, specific procedures must be adopted, in accordance with the regulations in force in the country where the vehicle is used.

To adjust the headlight beam:

- Position the vehicle on the stand, see p. 82 (POSITIONING THE VEHICLE ON THE STAND).
- Working on the rear left side of the front fairing, adjust the appropriate screw (1) by means of a short cross-tip screwdriver.
  - By SCREWING IT (clockwise), you set the beam upwards;
  - By UNSCREWING IT (anticlockwise), you set the beam downwards.

After the adjustment:

⚠ WARNING

Make sure that the vertical adjustment of the headlight beam is correct.

Downloaded from www.Manualslib.com manuals search engine

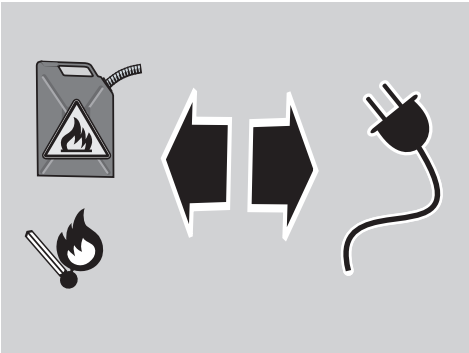

BULBS

Carefully read p. 58 (MAINTENANCE).

⚠ WARNING

Risk of fire.

Keep fuel and other flammable substances away from the electrical components.

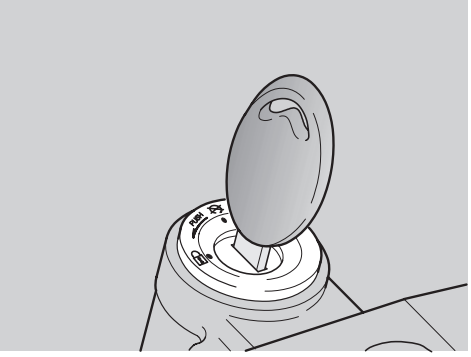

⚠ CAUTION

Before changing a bulb, move the ignition switch to position " 0 " and wait a few minutes, so that the bulb cools down.

Change the bulb wearing clean gloves or using a clean and dry cloth.

Do not leave fingerprints on the bulb, since these may cause its overheating and consequent breakage.

If you touch the bulb with bare hands, remove any fingerprint with alcohol, in order to avoid any damage.

DO NOT FORCE THE ELECTRIC CABLES.

NOTE Before changing a bulb, check the fuses, see p. 128 (CHANGING THE FUSES).

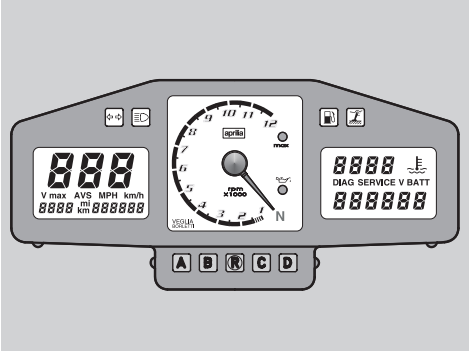

CHANGING THE DASHBOARD BULBS

If you need assistance or technical advice, consult your **aprilia Official Dealer**, who can ensure you prompt and accurate servicing.

Downloaded from www.Manualslib.com manuals search engine

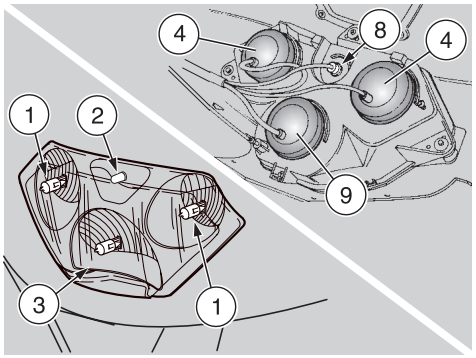

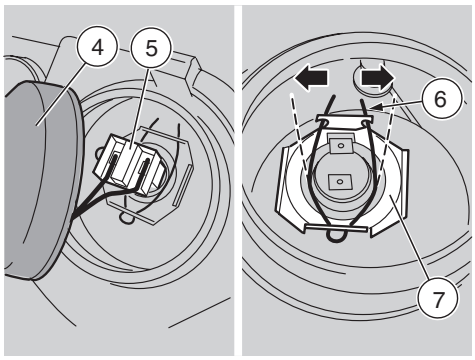

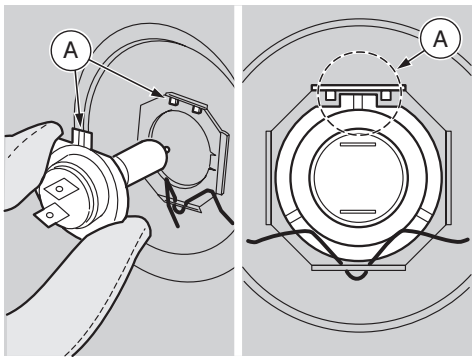

CHANGING THE HEADLIGHT BULBS

Carefully read p. 131 (BULBS).

The headlight contains:

– two high beam bulbs (1) (side);
– one parking light bulb (2) (upper);
– one low beam bulb (3) (lower).

The high beam and the low beam bulbs are the same.

If either of them is damaged and no spare bulb is available, it is possible to invert them.

This operation is intended only to make it easier for the rider to go back home or to reach a shop where he can buy a new bulb, but the replacement of the damaged bulb remains indispensable.

To change the bulbs, proceed as follows:

◆ Position the vehicle on the stand, see p. 82 (POSITIONING THE VEHICLE ON THE STAND).

HIGH BEAM BULBS

NOTE Extract the connectors one by one, in such a way as to avoid positioning them wrongly upon reassembly.

If it is necessary to remove all the connectors at the same time, mark them and make sure that you position them correctly upon reassembly.

◆ Remove the front fairing, see p. 109 (REMOVING THE FRONT FAIRING).
◆ Move the protection element (4) of the bulb to be changed with your hands.

⚠ CAUTION

To extract the bulb electric connector, do not pull its wires.

◆ Grasp the bulb electric connector (5), pull it and disconnect it from the bulb.
◆ Release the two ends of the check spring (6) positioned on the bulb socket (7).
◆ Extract the bulb from its seat.

NOTE Insert the bulb in the bulb socket, making the respective positioning seats (A) coincide.

◆ Correctly install a new bulb of the same type.

Upon reassembly:

NOTE Put back the protection element (4) with the cable passage facing downwards.

Downloaded from www.Manualslib.com manuals search engine

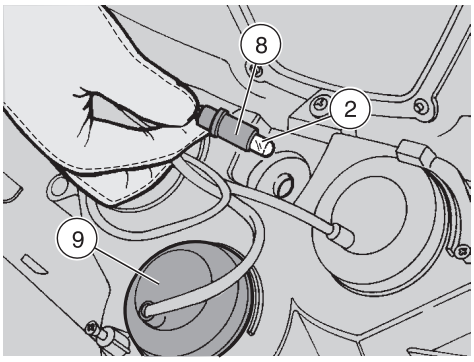

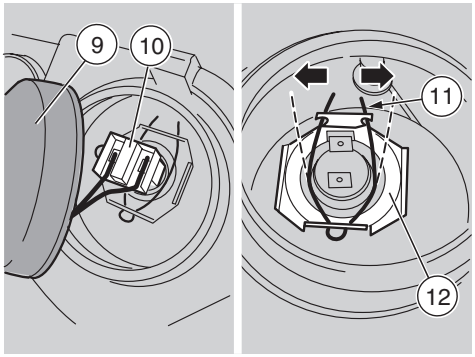

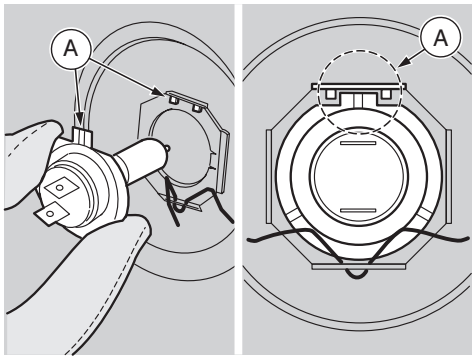

PARKING LIGHT BULB

◆ Remove the front fairing, see p. 109 (REMOVING THE FRONT FAIRING).

⚠ CAUTION

To extract the bulb socket, do not pull the electric wires.

◆ Grasp the parking light bulb socket (8), pull it and remove it from its seat.
◆ Withdraw the bulb (2) and replace it with one of the same type.

NOTE Make sure that the bulb is correctly inserted in the bulb socket.

LOW BEAM BULB

NOTE Extract the connectors one by one, in such a way as to avoid positioning them wrongly upon reassembly.

If it is necessary to remove all the connectors at the same time, mark them and make sure that you position them correctly upon reassembly.

◆ Remove the front fairing, see p. 109 (REMOVING THE FRONT FAIRING).
◆ Move the protection element (9) with your hands.

⚠ CAUTION

To extract the bulb electric connector, do not pull its wires.

◆ Grasp the bulb electric connector (10), pull it and disconnect it from the bulb.
◆ Release the two ends of the check spring (11) positioned on the bulb socket (12).

◆ Extract the bulb from its seat.

NOTE Insert the bulb in the bulb socket, making the respective positioning seats (A) coincide.

◆ Correctly install a new bulb of the same type.

Upon reassembly:

NOTE Put back the protection element (9) with the cable passage facing downwards.

Downloaded from www.Manualslib.com manuals search engine

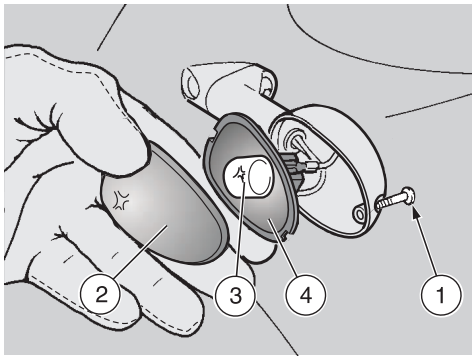

CHANGING THE FRONT AND REAR DIRECTION INDICATOR BULBS

Carefully read p. 131 (BULBS).

- Position the vehicle on the stand, see p. 82 (POSITIONING THE VEHICLE ON THE STAND).
- Unscrew and remove the screw (1).

⚠ CAUTION

While removing the protection screen, proceed carefully in order not to break the cog.

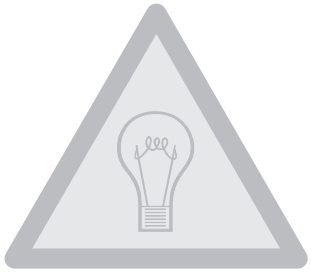

- Remove the protection screen (2).

⚠ CAUTION

Upon reassembly, correctly position the protection screen in its seat. Tighten the screw (1) moderately and carefully, to avoid damaging the protection screen.

- Press the bulb (3) slightly and rotate it anticlockwise.
- Extract the bulb (3) from its seat.

⚠ CAUTION

Insert the bulb in the bulb socket, making the two bulb pins coincide with the relevant guides on the socket.

- Correctly install a new bulb of the same type.

⚠ CAUTION

If the bulb socket (4) goes out of its seat, insert it correctly, making the bulb socket taper opening coincide with the screw seat.

Downloaded from www.Manualslib.com manuals search engine

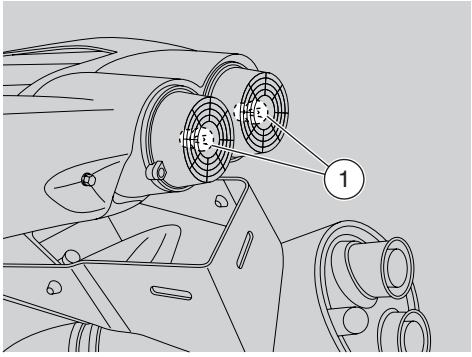

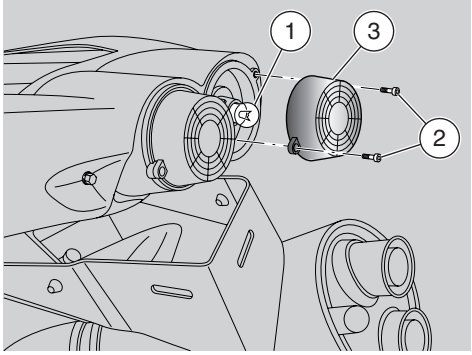

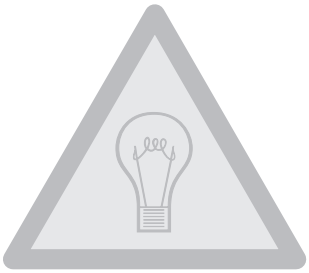

CHANGING THE TAIL LIGHT BULB

Carefully read p. 131 (BULBS).

NOTE The tail light houses two parking light/stoplight bulbs (1).

The following operations refer to a single bulb, but are valid for both.

Before changing a bulb, check the efficiency of the stoplight switches, see p. 127 (CHECKING THE SWITCHES).

- Position the vehicle on the stand, see p. 82 (POSITIONING THE VEHICLE ON THE STAND).
- Unscrew and remove the two screws (2).
- Remove the protection screen (3).

NOTE Upon reassembly, correctly position the protection screen in its seat.

Tighten the screws (2) carefully, without exerting too much pressure, in order to avoid damaging the protection screen.

- Press the bulb (1) slightly and rotate it anticlockwise.
- Extract the bulb (1) from its seat.

⚠ CAUTION

Insert the bulb in the bulb socket, making the two bulb pins coincide with the relevant guides on the socket.

- Correctly install a new bulb of the same type.

Downloaded from www.Manualslib.com manuals search engine

⚠ CAUTION

Never drain the fuel tank, either partially or completely. This may cause damage to the inner components of the fuel tank, or to other parts of the fuel system.

Always ensure that the fuel filler cap is correctly closed.

⚠ WARNING

Never attempt to tow your vehicle with another vehicle.

⚠ WARNING

While your vehicle is being transported, it must be kept in a vertical position, firmly tied down, and with the wheels blocked.

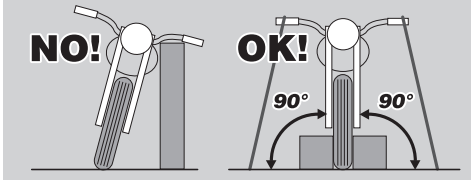

Transport your vehicle in neutral gear only.

Failure to heed this warning could cause serious damage to the transmission due to vibration of the transport truck.

DRAINING THE FUEL TANK

⚠ CAUTION

Never drain the fuel tank, either partially or completely. This may cause damage to the inner components of the fuel tank, or to other parts of the fuel system.

Always ensure that the fuel filler cap is correctly closed.

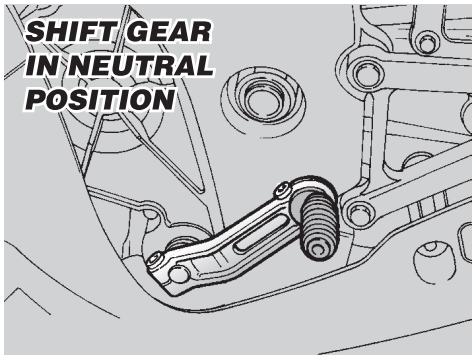

Downloaded from www.Manualslib.com manuals search engine

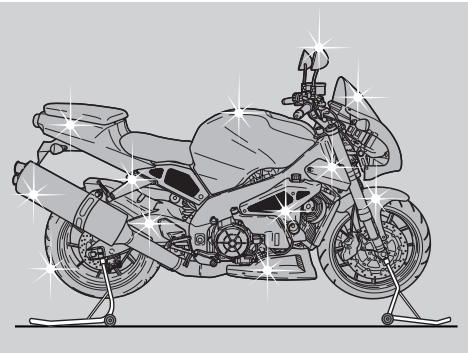

Clean the vehicle frequently if it used in particular areas or conditions, such as:

– Polluted areas (cities and industrial areas).
– Areas characterized by a high percentage of salinity and humidity (sea areas, hot and humid climates).
– Particular conditions (use of salt and anti-ice chemical products on the roads during the winter).
– Avoid leaving deposits of industrial and polluting powders, tar spots, dead insects, bird droppings, etc. on the body.
– Avoid parking the vehicle under trees, since in some seasons residues, resins, fruits or leaves fall down, which contain substances that may damage the paint.

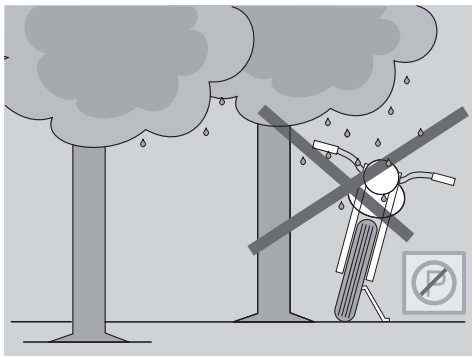

⚠ WARNING

After the vehicle has been washed, its braking functions could be temporarily impaired because of the presence of water on the grip surfaces.

Calculate long braking distances to avoid accidents.

Brake repeatedly to restore normal conditions.

Carry out the preliminary checking operations, see p. 71 (PRELIMINARY CHECKING OPERATIONS).

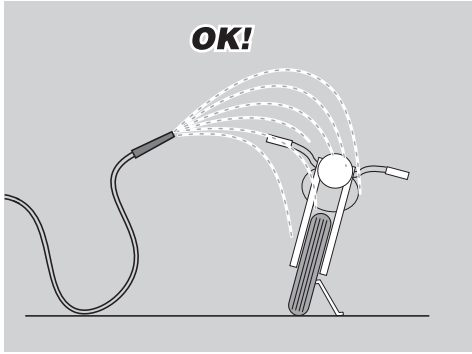

To remove dirt and mud from the painted surfaces use a low- pressure water jet, carefully wet the dirty parts, remove mud and filth with a soft car sponge impregnated with a lot of water and shampoo (2 – 4% parts of shampoo in water).

Then rinse with plenty of water and dry with chamois leather.

To clean the outer parts of the engine use a degreaser, brushes and wipers.

After washing the vehicle, always:

◆ Remove the cap (1).
◆ Empty its content into a container and deliver it to a salvage center.

Downloaded from www.Manualslib.com manuals search engine

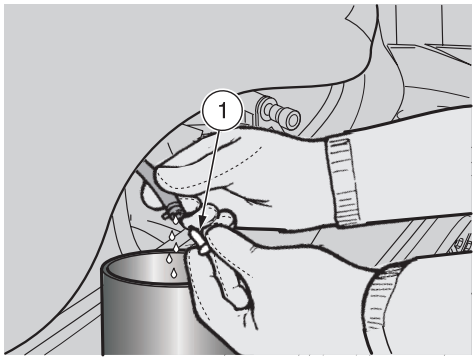

⚠ CAUTION

To clean the lights, use a sponge soaked with water and a neutral detergent, rubbing the surfaces delicately and rinsing frequently with plenty of water.

Polish with silicone wax only after having carefully washed the vehicle.

Do not use polishing pastes on matt paints.

Do not wash the vehicle under the sun, especially during the summer, when the body is still warm, since if the shampoo dries before being rinsed away, it can damage the paint.

Do not use liquids at a temperature exceeding 104 °F (40°C) to clean the plastic components of the vehicle.

⚠ CAUTION

Do not direct high-pressure water or air jets or steam jets on to the following components: wheel hubs, controls on the right and left side of the handlebar, bearings, brake master cylinders, instruments and indicators, exhaust pipes, glove/tool kit compartment, ignition switch/steering lock, radiator fins, fuel cap, lights and electric connections.

Do not use alcohol, petrol or solvents to clean the rubber and plastic parts and the seat: use only water and mild soap.

⚠ WARNING

Do not apply protection waxes onto the seat, in order not to make it too slippery.

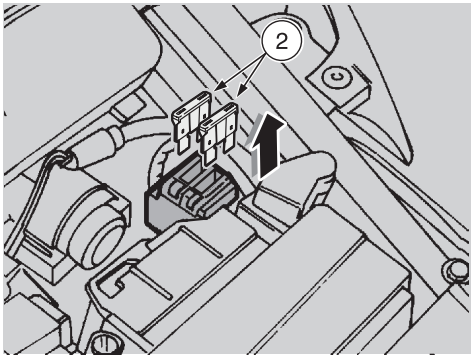

LONG PERIODS OF INACTIVITY

⚠ CAUTION

If this vehicle is not used for more than twenty days, remove the 30A fuses (2), see p. 128 (CHANGING THE FUSES). This will prevent the discharge of the battery caused by the slight current consumption of the multifunction computer.

NOTE The removal of the 30A fuses will cause the digital clock and the red line setting to go to zero. To reset these functions, see p. 40 (MULTIFUNCTION COMPUTER).

If the vehicle is to be stored for a relatively long period of time, such as over the winter, some simple precautions will make putting the vehicle back into service much easier.

It is much less difficult to prepare the

Downloaded from www.Manualslib.com manuals search engine

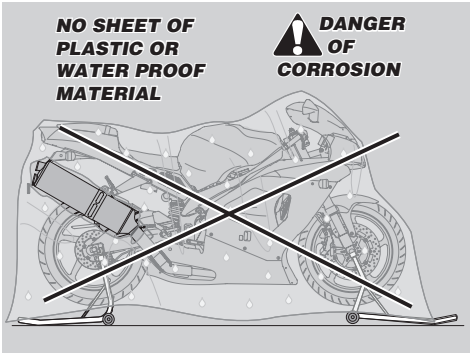

vehicle for storage properly than it is to restore the vehicle to proper working condition after a storage period if you have forgotten or neglected to do this preparation.

To prepare the vehicle for storage:

- Remove the battery, see p. 124 (REMOVING THE BATTERY).
- Wash and dry the vehicle, see p. 137 (CLEANING).
- Polish the painted surfaces with wax, see p. 137 (CLEANING).
- Inflate the tires, see p. 65 (TIRES).
- Do not drain the fuel tank. However, if available, you may wish to add a proprietary fuel storage additive, available from your **aprilia** Official Dealer or automobile supply stores. Follow the instructions on the container of the additive.

NOTE Do not add more than the recommended amount of additive.

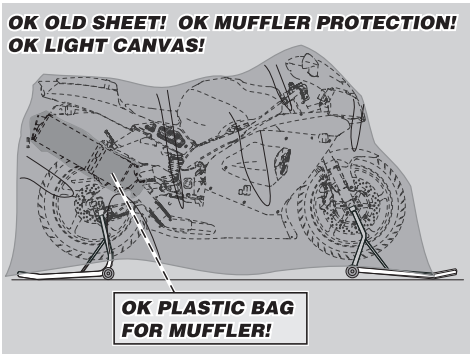

⚠ CAUTION

Some fuel additives may damage some components of your fuel system. Check with your aprilia Official Dealer.

- Place the vehicle in a cool, dry room, away from direct sunlight, with minimum temperature variations.

⚠ WARNING

Before carrying out the following operations, let the engine and the exhaust silencer cool down until they reach room temperature. Failure to observe this warning can lead to serious burns.

- Place a plastic bag over the outlet pipe of the muffler, and tape or tie it tight.

NOTE You must use the appropriate front and rear support stands to store your vehicle so that both tires are raised from the ground.

- Place the vehicle on the appropriate rear support stand J, see p. 96 (POSITIONING THE VEHICLE ON THE REAR SERVICE STAND g).
- Place the vehicle on the appropriate front support stand J, see p. 96 (POSITIONING THE VEHICLE ON THE FRONT SERVICE STAND g).
- Cover the vehicle with an old sheet or a light canvas, do not use a sheet of plastic or other waterproof material. This will cause condensation which will result in corrosion.

PUTTING THE VEHICLE BACK INTO SERVICE

NOTE Remove the plastic bag from the outlet pipe of the muffler.

- Uncover and clean the vehicle, see p. 137 (CLEANING).
- Check the charge of the battery, see p. 125 (RECHARGING THE BATTERY) and install it, see p. 126 (INSTALLING THE BATTERY).
- Carry out the preliminary checking operations, see p. 71 (PRELIMINARY CHECKING OPERATIONS).

⚠ WARNING

Test ride the vehicle at moderate speed in a low traffic area before you ride in heavy traffic.

Downloaded from www.Manualslib.com manuals search engine

TECHNICAL DATA

DIMENSIONS	Max. length	81.496 Inc (2070 mm)
	Max. length (with number plate-holder extension) g	84.252 Inc (2140 mm)
	Max. width	31.496 Inc (800 mm)
	Max. height (front part of the fairing included)	46.024 Inc (1169 mm)
	Seat height	32.283 Inc (820 mm)
	Wheel base	55.709 Inc (1415 mm)
	Min. ground clearance	5.118 Inc (130 mm)
	Weight ready for starting	R 463.05 lb (210 kg) – q 458.64 lb (208 kg)
ENGINE	Model	V990
	Type	60° longitudinal V-type, two-cylinder, 4-stroke, with 4 valves per cylinder, DOHC.
	Number of cylinders	2
	Total displacement	997.62 cm^3
	Bore/stroke	3.819 Inc / 2.657 Inc (97 mm/67.5 mm)
	Compression ratio	(11.8 ± 0.4: 1)
	Starting	electric
	Engine idling rpm	1250 ± 100 rpm
	Clutch	multidisc in oil bath, with hydraulic control on the left side of the handlebar and PPC device
	Lubrication system	dry pan with separate oil tank and cooling radiator
	Air cleaner	with dry filter cartridge
	Cooling	liquid-cooled
TRANSMISSION	Type	mechanical, 6 gears with foot control on the left side of the engine
CAPACITY	Fuel (reserve included)	4.755 US gal (18 ℓ)
	Fuel reserve	1.189 ± 0.264 US gal (4.5 ± 1 ℓ)
	Engine oil	oil change 3700 cm^3 – oil and oil filter change 3900 cm^3
	Fork oil R	520 ± 2.5 cm^3 (per leg)
	"R" q (R g) fork oil	500 ± 2.5 cm^3 (per leg)
	Coolant	0.66 US gal (2.5 ℓ) (50% water + 50% antifreeze with ethylene glycol)
	Seats	2
	Vehicle max. load	416.75 lb (189 kg) (driver + passenger + luggage)

Downloaded from www.Manualslib.com manuals search engine

GEAR RATIOS	Ratio	Primary	Secondary	Final ratio	Total ratio
	1st	31/60 = 1: 1.935	15/34 = 1: 2.267	17/42 = 1: 2.471	1: 10.839
	2nd		19/31 = 1: 1.632		1: 7.802
	3rd		20/26 = 1: 1.300		1: 6.216
	4th		22/24 = 1: 1.091		1: 5.216
	5th		25/24 = 1: 0.960		1: 4.591
	6th		26/23 = 1: 0.885		1: 4.230

DRIVE CHAIN	Type	endless (with no connection link) with sealed links
	Model	525
FRAME	Type	two-beam frame with light alloy cast elements and extruded elements
	Steering inclination angle	25°
	Trail	3.898 Inc (99 mm) (with front tire 120/70)
SUSPENSIONS	Front	upside-down telescopic adjustable fork with hydraulic operation, leg Ø 1.693 Inc (43 mm)
	Stroke	R 5.00 Inc (127 mm) – q (R g) 4.724 Inc (120 mm)
	Rear	oscillating rear swinging arm in light alloy with differentiated profile arms and hydropneumatic adjustable mono-shock absorber
	Full bump position	5.315 Inc (135 mm)
BRAKES	Front	with double floating disc – Ø 12.598 Inc (320 mm), calipers with four pistons – Ø 1.339 Inc (34 mm)
	Rear	disc brake – Ø 8.661 Inc (220 mm), caliper with double piston – Ø 1.260 Inc (32 mm)
WHEEL RIMS	Type	in light alloy with removable shaft
	Front	3.50 x 17"
	Rear	6.00 x 17"

Downloaded from www.Manualslib.com manuals search engine

TIRES

✱ = di serie q ; ✱✱ = di serie R ▲ = Utilizzo normale; ▞ = Utilizzo sportivo

Wheel	Make	Model	Type	Size	Alternative	Pressure kPa (Psi)	
						Solo rider	Rider and passenger
Front	METZELER	SPORTTEC	M 1	120/70-ZR 17"	▞	250 (36.77)	250 (36.77)
Rear	METZELER	SPORTTEC	M 1	180/55-ZR 17"	▞	280 (41.19)	280 (41.19)
Rear	METZELER	SPORTTEC	M 1	190/50-ZR 17"	▞	280 (41.19)	280 (41.19)
Front	BRIDGESTONE	BT010	DOTENY0; VDB3801	120/70-ZR 17"		250 (36.77)	250 (36.77)
Rear	BRIDGESTONE	BT010	DOTENA5; DBA4901	180/55-ZR 17"		280 (41.19)	280 (41.19)
Rear	BRIDGESTONE	BT010	DOTENB11; DEL0101	190/50-ZR 17"		280 (41.19)	280 (41.19)
Front	MICHELIN	PILOT SPORT	E	120/65-ZR 17"	▞	250 (36.77)	250 (36.77)
Rear	MICHELIN	PILOT SPORT	E	190/50–ZR 17"	▞	280 (41.19)	280 (41.19)
Front	PIRELLI	DRAGON CORSA	MTR 21	120/70-ZR 17"	▞	250 (36.77)	250 (36.77)
Rear	PIRELLI	DRAGON CORSA	MTR 22 “B“	180/55-ZR 17"	▞	280 (41.19)	280 (41.19)
Rear	PIRELLI	DRAGON EVO	MTR 22 CORSA	180/55-ZR 17"	▞	280 (41.19)	280 (41.19)
Rear	PIRELLI	DRAGON EVO	MTR 22 CORSA	190/50-ZR 17"	▞	280 (41.19)	280 (41.19)
Front	METZELER	STEEL RADIAL	ME Z3-RACING	120/70-ZR 17"	▞	250 (36.77)	250 (36.77)
Rear	METZELER	STEEL RADIAL	ME Z3-RACING	190/50-ZR 17"	▞	280 (41.19)	280 (41.19)
Rear	METZELER	STEEL RADIAL	ME Z3-RACING	180/55-ZR 17"	▞	280 (41.19)	280 (41.19)
Front	DUNLOP	SPORTMAX	D 207 F RR	120/70-ZR 17"	▞	250 (36.77)	250 (36.77)
Rear	DUNLOP	SPORTMAX	D 207 F RR	190/50-ZR 17"	▞	280 (41.19)	280 (41.19)
Rear	DUNLOP	SPORTMAX	D 207 F RR	180/55-ZR 17"	▞	280 (41.19)	280 (41.19)

Downloaded from www.Manualslib.com manuals search engine

FUEL SUPPLY SYSTEM	Type	electronic injection (Multipoint)
	Choke	Ø 2.008 Inc (51 mm)
FUEL SUPPLY	Fuel	premium grade unleaded petrol, min. O.N. 95 (N.O.R.M.) and 85 (N.O.M.M.).
SPARK PLUGS	Standard	NGK R DCPR9E
	Spark plug gap	0.024 ±0.028 Inc (0.6 – 0.7 mm)
	Resistance	5 kΩ
ELECTRIC SYSTEM	Battery	12 V – 10 Ah
	Main fuses	30 A
	Secondary fuses	15 A
	Generator (with permanent magnet)	12 V – 400 W
BULBS	Low beam (halogen)	12 V – 55 W H7U
	High beam (halogen)	12 V – 55 W H7U
	Front parking light	12 V – 5 W
	Direction indicators	12 V – 10 W
	Rear parking lights/Number plate light/ Stoplight	12 V – 5/21 W
	Revolution counter	12 V – 2 W
	Left multifunction display	12 V – 2 W
	Right multifunction display	12 V – 2 W
WARNING LIGHTS	Neutral	12 V – 3 W
	Direction indicators	12 V – 3 W
	Fuel reserve	12 V – 3 W
	High beam	12 V – 3 W
	Stand down	12 V – 3 W
	Engine oil pressure	LED
	Red line	LED

Downloaded from www.Manualslib.com manuals search engine

LUBRICANT CHART

(Recommended) engine oil: EXTRA RAID 4, SAE 15W - 50 or TEC 4T, SAE 15W - 50.

As an alternative to recommended oils, top brand oils meeting or exceeding CCMC G-4, A.P.I. S.G. specifications can be used.

RSV **(Recommended) fork oil:** F.A. 5W, F.A. 20W; as an alternative, FORK 5W or FORK 20W.

When you wish to obtain an intermediate response between those offered by F.A. 5W and F.A. 20W oils or FORK 5W and FORK 20W, oils, you may mix the different products as follows:

SAE 10W = F.A. 5W 67% of volume + F.A. 20W 33% of volume, or

FORK 5W 67% del volume + FORK 20W 33% of volume.

SAE 15W = F.A. 5W 33% of volume + F.A. 20W 67% of volume, or

FORK 5W 33% of volume + FORK 20W 67% of volume.

RSV R (RSV R OPT) **Fork oil type "R":** OHLINS 10W

Bearings and other lubrication points (recommended): BIMOL GREASE 481 - GREASE MP or GREASE 30.

As an alternative to recommended grease, use top brand rolling bearing grease that will resist a temperature range of -30°C - +140°C, with dropping point 150°C - 230°C, high corrosion protection, good resistance to water and oxidisation.

Battery lead protection: use neutral grease or Vaseline.

Spray grease for chains (recommended): CHAIN SPRAY or CHAIN LUBE.

⚠ WARNING

Use new brake fluid only. Do not mix different brands or types of oil without first checking base compatibility.

Brake fluid: The system is filled with Autofluid FR. DOT 4 (the braking system is also compatible with DOT 5); BRAKE 5.1 DOT 4 (the braking system is also compatible with DOT 5).

⚠ WARNING

Use new clutch fluid only

Clutch fluid (recommended): F.F., DOT 5 (Compatibile DOT 4) ; BRAKE 5.1 DOT 5 (the braking system is also compatible with DOT 4).

⚠ WARNING

Use only nitrite-free antifreeze and corrosion inhibitors with a freezing point of at least -35°C.

(Recommended) engine coolant: ECOBLU -40 °C - COOL.

Downloaded from www.Manualslib.com manuals search engine

THE VALUE OF SERVICE aprilia

Thanks to ongoing technical updates and product-specific technical training, **aprilia** Authorised Network engineers are familiar with every detail of this motorcycle and have the special equipment required for correct maintenance and repair.

A vehicle kept in sleek running order is a reliable vehicle. Pre-ride checks, proper maintenance at the recommended intervals and using **aprilia** Original Parts only are other key factors !

To find contact information of the Authorised Dealer and/or Service Centre nearest you, please consult the Yellow Pages or the map provided at our web site:

www.aprilia.com

When you demand **aprilia** Original Parts, you are purchasing products that have been developed and tested as early as the vehicle design stage. **aprilia** Original Parts systematically undergo strict quality control procedures to ensure total reliability and long service life.

Downloaded from www.Manualslib.com manuals search engine

IMPORTERS

I **APRILIA**	via G. Galilei, 1 - 30033 Noale (VE) Italy Tel. +39(0)41 5829111 - Fax +39(0)41 441054 - Servizio Clienti **aprilia** +39(0)41 5786269
UK **APRILIA WORLD SERVICE UK branch**	15 Gregory Way - SK5 7ST Stockport - Cheshire Tel. 0044-161 475 1800 - Fax 0044-161 475 1825 - Email: emcaprilia@aol.com
D **APRILIA MOTORRAD**	Am Seestern 3 - D-40547 - Dusseldorf Tel. 0049-211-59018-00 - Fax 0049-211-5901819
NL **APRILIA WORLD SERVICE B.V.**	Nikkelstraat 1 - 4823 - Ae Breda Tel. 0031-76-5431640 - Fax 0031-76-5431649
E **APRILIA WORLD SERVICE** Succursale en Espana	Edificio América, Av.da de Arangòn, 334 - 28022 Madrid Tel. 0034-91-7460066 - Fax 0034-91-7460065
F **APRILIA WORLD SERVICE** Succursale en France	z.a. Central Parc - 255 Blv. R. Ballanger B.P. 77 - 93421- Villepinte Tel. 0033-1-49634747 - Fax 0033-1-49638750
CZ **A. SPIRIT A.S.**	Saldova 38 - 180 00 - Praha 8 - Karlin Bubenska 43 - 170 00 - Praha 7 Tel. 0042-02-96547142 - Fax 0042-02-96547145 - Email: pistek@aspirit.cz
SLO **AVTO TRIGLAV d.o.o.**	Baragova 5 - 1113 - Ljubljana Tel. 00386-1-5883 421 - Fax. 00386-1-5883465 - Email: ziga.martincic@avto-triglav.si
A **GINZINGER IMPORT GmbH & CO.**	Frankenburgerstrasse 19 - 4910 - Ried im Innkreis Tel. 0043-7752-88077 - Fax. 0043-7752-70684 - Email: elke.ginzinger@ivnet.co.at
HR **ING-KART d.o.o.**	Samoborska cesta 258 - 10000 - Zagreb Tel. 00385-1-3498000 - Fax. 00385-1-3499111 - Email: mario.petrusa@aprilia.hr
IRL **K.D.I. Kawasaki Distributor IRL. LTD:**	no. 1 Long Mile Road - Dublin 12 Tel. 00353-1-4566222 - Fax. 00353-1-4756461 - Email:sales@bikeworld.ie
N **HARO SKANDINAVIA A.S.**	Kjorbekkdalen 6 - 3735- Skien Tel. 0047-35506780 - Fax. 0047-35506781 - E-mail:tore@aprilia.no

Downloaded from www.Manualslib.com manuals search engine

aprilia

IMPORTERS

TR **MOTOMAX MOTORLU ARACLAR SAN. VE TIC. A.S.**	Kore Sehitleri Cad. No. 42 - 80300 - Zincirlikuyu - Istanbul Tel. 0090-212-3360058 - Fax. 0090-212-3360057- Email:sule@interline.com.tr
H **MILLE MOTOR KFT.**	Hold utca 23 - H-1054 - Budapest Tel. 0036-1-3329938 - Fax. 0036-1-2693044 - Email: bertinus@elender.hu
P **MILFA IMPORTAÇÃO EXPORTAÇÃO LDA.**	Av. Da Republica 692 - 4450 - Matosinhos Tel. 00351-229382450 - Fax. 00351-229371305 - Email: milfa@meganet.pt
GR **MOBILITY S.A.**	Lahana 12 N. Filadelphia - 14342 - Athens Tel. 0030-12 02723553 - Fax. 0030-12 776688 - Email: mobility@internet.gr
CH **MOHAG A.G.**	Bernerstrasse Nord 202 - 8064 - Zurigo Tel. 0041-1-4348686 - Fax 0041-1-434 8606 - Email: info@mohag.ch
B **N.V./S.A. RAD**	Landegemstraat 4 - Industriegebied - B-9031 - Drongen-Baarle Tel. 0032-9-2829410 - Fax. 0032-9-2810012 - Email: aprilia@rad.be
DK **T.M.P.**	Hammervej 32 - 7900 - Nikobing Mors Tel. 0045-97-722233 - Fax. 0045-97-722143/33 - Email: thomas@aprilia.dk
SF **TUONTI NAKKILA OY**	P.o.B. 18 - 29250 - Nakkila Tel. 00358-2-5352500 - Fax. 00358-2-5372793 - Email: satu.saarinen@aprilia.fi
R **RO GROUP INT.**	Str. Depozitelor 41-43 Jud. Arges - Pitesti Tel. 0040-248211004 -Fax. 0040-248211004 - Email: marian.ion@rogroup.ro
CSI **Z.A.O. ITALMOTO**	Ul. Preobragenskaya 5/7 - 107076 - Moscow Tel. 007-095-780 4294 - Fax. 007-095-208 3228 - Email: italmoto@mtu-net.ru
USA **APRILIA U.S.A., INC.**	109 Smoke Hill Lane Suite 190 - GA 30188 - Woodstock Tel. 001-770-592-2261 - Fax. 001-770-592-4878
J **APRILIA JAPAN CORP.**	SHINYOKOHAMAMEGURO BLDG. 3-22-5 SHINYOKOHAMA KOUHOKU-KU 222-0033 YOKOHAMA-SHI KANAGAWA (J) -Tel. 0081-454772632 - Fax 0081-454772605 - Email: m-okuyama@apriliajapan.co.jo
AUS **JOHN SAMPLE GROUP PTY LTD.**	8 Sheridan Close - NSW 2214 - Milperra - Sydney Tel. 0061-2-97722666 - Fax. 0061-2-97742321 - Email: doreilly@jsg.com.au

Downloaded from www.Manualslib.com manuals search engine

aprilia

IMPORTERS

NZ **MOTORCYCLING DOWNUNDER LTD.**	35, Manchester Street - P.o.B. 22416 - Christchurch Tel. 0064-3-3660129 - Fax. 0064-3-3667580 - Email: guzzi@motorcycling-nz.co.nz
RSA **MOTOVELO S.A.**	Old Pretoria Road - Wynberg - Johannesburg Tel. 0027-11-7868486 - Fax. 0027-11-7868482 - Email: motovelo@betech.co.za
MEX **APRILIA DE MEXICO, SA. de CV.**	San Jeromino - 64640 - 552 Monterrey N.L. Tel. 0052-8333-4493 - Fax. 0052-8348-9398 - sbertuEmail: javier@aprilia.com.mx
ROK **BIKE KOREA CO. LTD.**	YeungSoo Bldg. 302 #206-25, Ohjang-Dong, Chung-Ku Seoul Tel. 0082-2-22756130 - Fax 0082-2-22756132 - Email: kukbike@yahoo.co.kr
RP **ULTRA BIKERS NETWORK INC.**	Bldg. 7294 cn Recto Highway - Pampanga Tel. 00632-7524450 - Fax 00632-7505764 - Email: ultrabikes@mydestiny.net
SGP **CYCLENET PTE TLD**	1179 Serangoon Road - 328232 - Singapore Tel. 0065 6299 6251100 - Fax. 0065 6297 5684 - Email: jeorjb@yahoo.com
HK **AH LAM MOTORCYCLE CO. LTD.**	29 Hak Po Street - Mongkok Kowloon - Hong Kong Tel. 00852-23859229 - Fax. 00852-23857920 - Email: garyyip@ahlam.com.hk
RC **PERFECT MOTORS COMPANY LIMITED**	No. 281 Jungshing North Street - Sanchung City - 241 - Taipei Tel. 00886-2-85111156 - Fax. 00886 2 85111148 - Email: taiwan.eisyu@msa.hinet.net
KWT **AL-RADWAN INTERNATIONAL GROUP**	Block 1, Street 13, Plot 107 45703 - Shuwaikh Industrial Tel. 00965-4828072 - Fax. 00965-4828073 - Email: zed@zedmotorz.com
RL **ACCESS INTERNATIONAL FOR TRADING SARL.**	Diamond Tower, 10th Floor P.O.B. 13 - Verdun, near Mandarine Beirut Tel. 00961-1797333 - Fax. 00961-1798333 - Email: access_in@hotmail.com
RI **PT. MOTOR MEGA PERFORMA**	Jl. Keutamaan no. 75 - Jakarta Barat Tel. 0062 21 63333929 - Fax. 0062 21 6337889 - Email: purity@cbn.net.id
CDN **BARRETT MARKETING GROUP ltd.**	9060 300 Lockhart Mill Road - E7M 5C3 - Woodstock Tel. 001-5063281315 - Fax. 001-5063281582 - Email: joshb@barrettgroup.com

Downloaded from www.Manualslib.com manuals search engine

NOTE

aprilia

ASK FOR GENUINE SPARE PARTS ONLY

Downloaded from www.Manualslib.com manuals search engine

WIRING DIAGRAM RSV MILLE - RSV MILLE R TUONO T

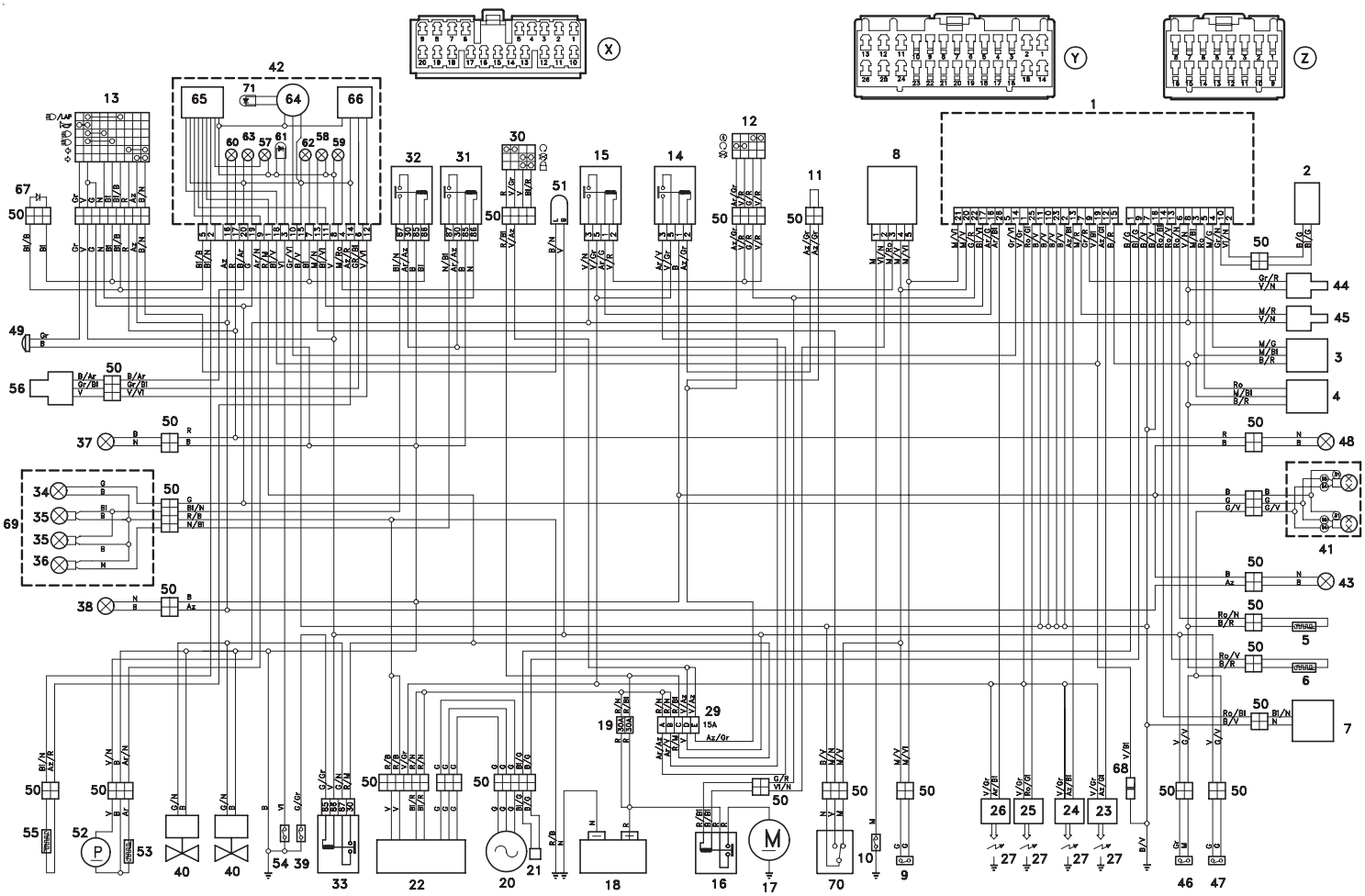

Downloaded from www.Manualslib.com manuals search engine

WIRING DIAGRAM KEY RSV MILLE - RSV MILLE R TUONO T

1) Electronic unit
2) Cam position sensor
3) Throttle valve position sensor
4) Intake pressure sensor
5) Coolant thermistor
6) Air thermistor
7) Fall sensor
8) Diode module
9) Clutch control lever switch
10) Neutral switch
11) Arrangement for the installation of the anti-theft device
12) Right dimmer switch
13) Left dimmer switch
14) Engine stop relay
15) Fuel pump relay
16) Start relay
17) Starter motor
18) Battery
19) Main fuses (30A) (ignition)
20) Generator
21) Pick up
22) Voltage regulator
23) Rear cylinder coil
24) Rear cylinder coil
25) Front cylinder coil
26) Front cylinder coil
27) Spark plugs
28) –
29) Secondary fuses (15A)
    A - High beam, low beam
    B - ISC, coils, fuel pump
    C - Electric fans, clock
    D - Parking lights, stoplights, horn, dashboard lights, direction indicators.
    E - Electronic control unit, fuel pump relay, engine stop relay.
30) Ignition switch
31) Low beam relay
32) High beam relay
33) Cooling fan relay
34) Front parking light bulb
35) High beam bulbs
36) Low beam bulb
37) Front right direction indicator
38) Front left direction indicator
39) Thermal switch
40) Cooling fans
41) Tail light
42) Dashboard
43) Rear left direction indicator
44) Front cylinder injector
45) Rear cylinder injector
46) Front stoplight switch
47) Rear stoplight switch
48) Rear right direction indicator
49) Horn
50) Multiple connectors
51) Flasher
52) Fuel pump
53) Low fuel sensor
54) Engine oil pressure switch
55) Coolant temperature thermistor
56) Speed sensor
57) Low fuel warning light
58) Side stand down warning light
59) Neutral warning light
60) Direction indicator warning light
61) Engine oil pressure warning light LED
62) High beam warning light
63) Dashboard bulbs
64) Revolution counter
65) Multifunction display (right side)
66) Multifunction display (left side)
67) Lights diode/LAP
68) TEST connectors
69) Headlight
70) Side stand switch
71) Red line warning light LED
72) Parking light/ rear stoplight bulbs

X) Dashboard connector (20-way)
Y) Electronic control unit connector (26-way)
Z) Electronic control unit connector (16-way)

CABLE COLORS

Ar	Orange	**M**	Brown
Az	Light blue	**N**	Black
B	Blue	**R**	Red
Bi	White	**V**	Green
G	Yellow	**Vi**	Violet
Gr	Grey	**Ro**	Pink

Downloaded from www.Manualslib.com manuals search engine

NOTE

aprilia

ASK FOR GENUINE SPARE PARTS ONLY

Downloaded from www.Manualslib.com manuals search engine

NOTE

aprilia

ASK FOR GENUINE SPARE PARTS ONLY

Downloaded from www.Manualslib.com manuals search engine

aprilia s.p.a. wishes to thank its customers for the purchase of this vehicle:

– Do not dispose of oil, fuel, polluting substances and components in the environment.

– Do not keep the engine running if it isn't necessary.

– Avoid disturbing noises.

– Respect nature.

Downloaded from www.Manualslib.com manuals search engine